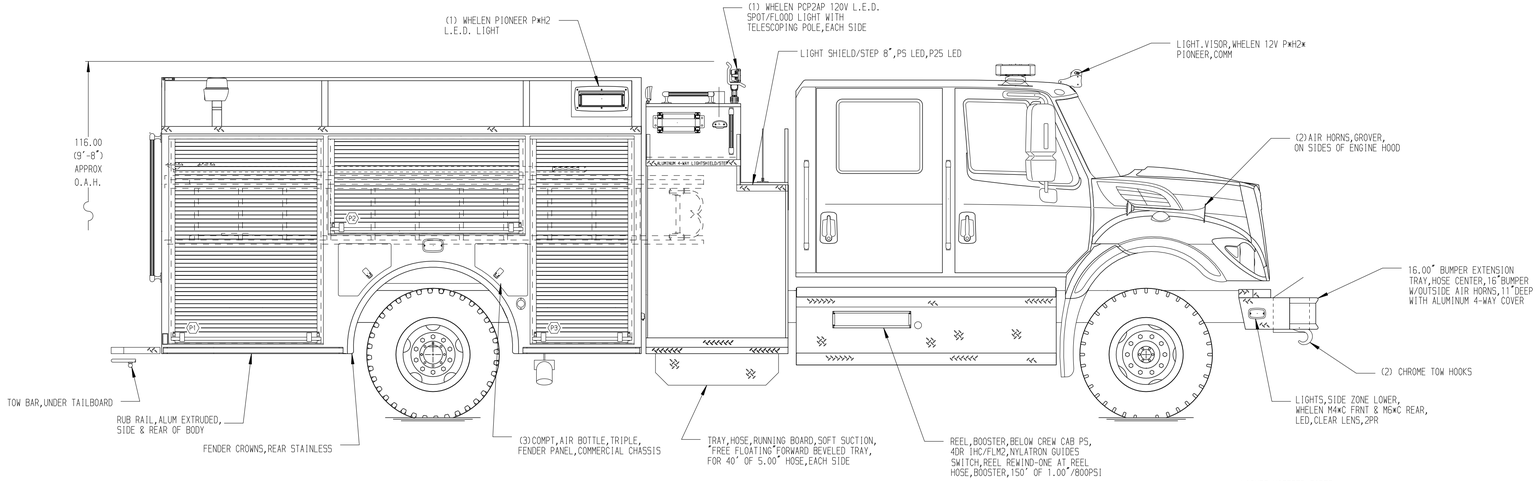

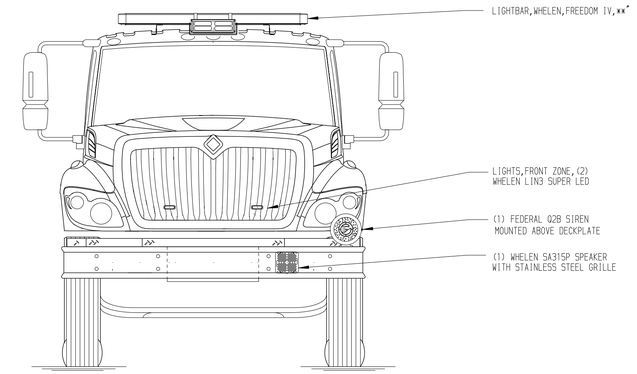

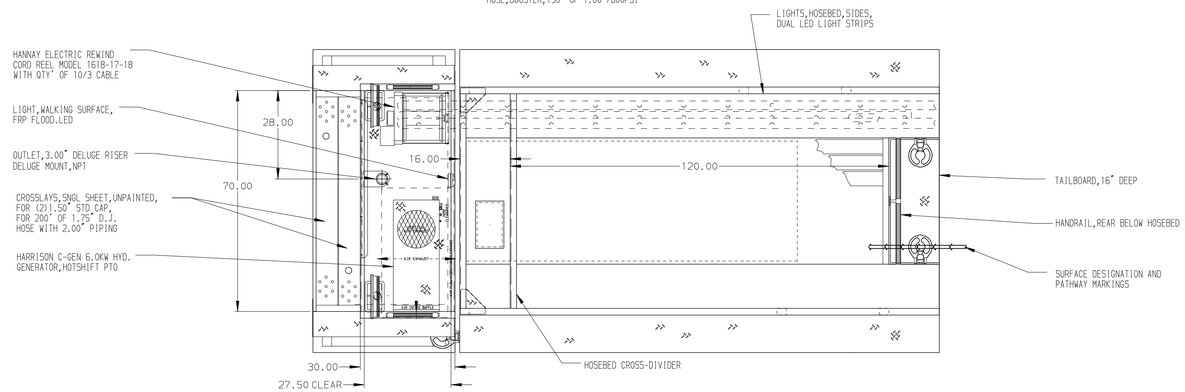

HOSEBED CAPACITIES

1. 1000" OF 5.00" D.J. HOSE
2. 1000" OF 3.00" D.J. HOSE

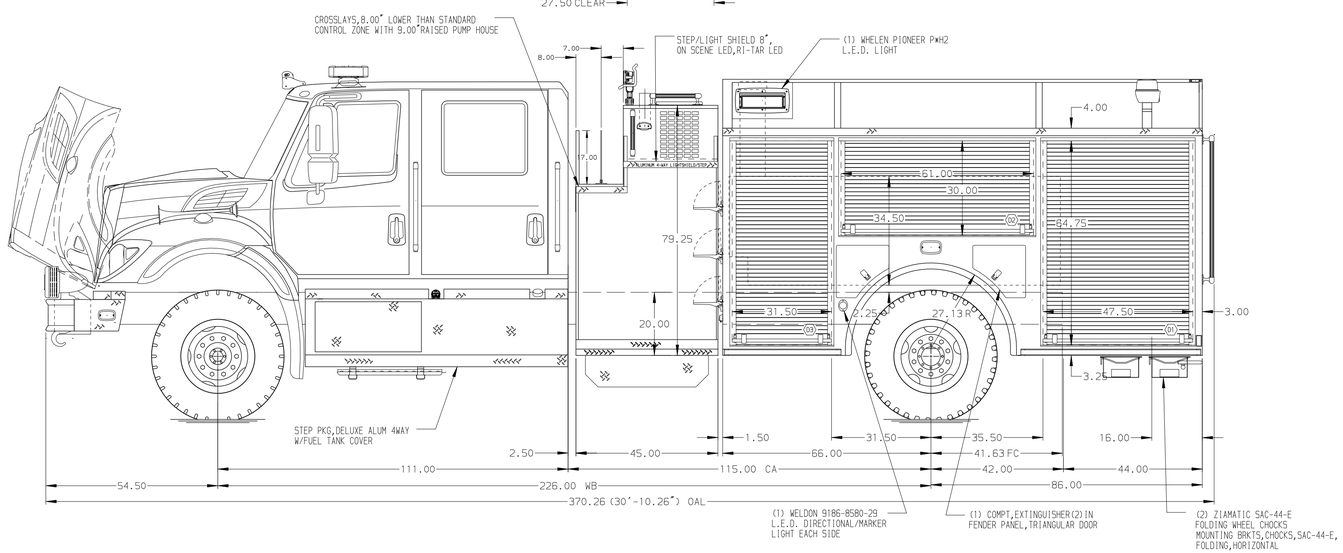

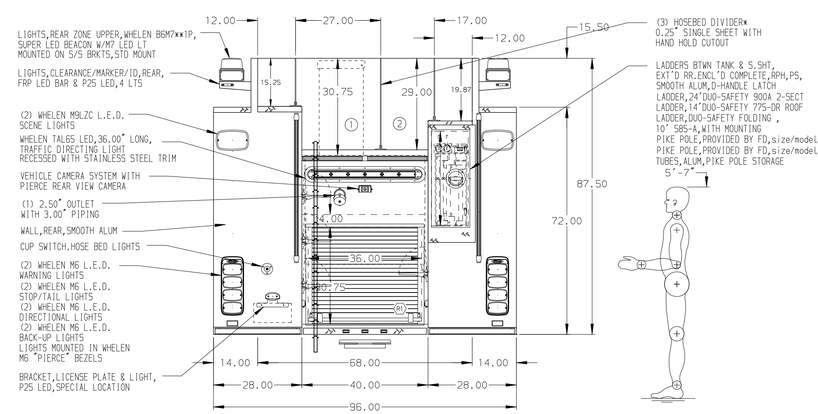

NOTE

DIMENSIONS SHOWN ARE APPROXIMATE AND ARE SUBJECT TO MINOR DEVIATIONS AS MAY OCCUR OR BE NECESSARY IN CONSTRUCTION.
MINOR DETAILS NOT SHOWN.

REV	DATE	BY	CH
V	13APR18	RWI	JLA

CHASSIS DATA — MAKE: IHC — MODEL: 7400

Pierce MANUFACTURING INC.

TITLE: 1500-D-500P,152" BODY,DS FULL HGHT&DPTH,PS FULL HGHT 45"SIDE CONTROL,(2)1.5"CROSSLAYS

FOR: ELSMERE FIRE DISTRICT, DELMAR, NEW YORK

DWG NO.: 32571AD

JOB NO.	PRELIM
SCALE	1:24
DATE	
DRAWN BY	JLA
	05APR18
CHECKED BY	RWI
	09APR18
SHEET SIZE	D
SHEET NO.	1 OF 1

View File Created 13-APR-2018 13:45:31