RIGHT SIDE COMPARTMENTS CONTAIN THE FOLLOWING:

COMPARTMENT RS1 CONTAINS:
- (1) STD DEPTH ADJ SLIDE OUT TRAY
- (1) STD DEPTH ADJ SLIDE OUT/TILT TRAY
-
-
-

COMPARTMENT RS2 CONTAINS:
- (1) 1/2 DEPTH ADJ SLIDE OUT/TILT TRAY
- (1) 2-WAY FLOOR MOUNTED SLIDE OUT TRAY
-
-

COMPARTMENT RS3 CONTAINS:
- (1) 2-WAY ADJ SLIDE OUT TRAY
- (1) 1/2 DEPTH ADJ SLIDE OUT/TILT TRAY
- (1) ELECTRIC CORD REEL WITH 200' OF 10/3 YELLOW CORD
- (1) TOOL AIR REEL WITH 150' OF HOSE
- TOOL AIR REGULATOR AND GAUGES
- (1) SLIDE OUT BRACKET FOR ROLLER GUIDES
- (1) 4-DRAWER C-TECH CABINET
-

COMPARTMENT RS4 CONTAINS:
- (1) CAB LIFT CONTROLLER
- (1) 2-WAY ADJ SLIDE OUT TRAY
- (1) 1/2 DEPTH ADJ SLIDE OUT/TILT TRAY
- (1) 15/20A,120V DUPLEX RECEPTACLE(GEN)
- (1) 15/20A,120V DUPLEX RECEPTACLE(SHOR)
- (2) HYDRAULIC REELS W/100' OF HOSE
- (1) SLIDE OUT BRACKET FOR ROLLER GUIDES
-
-

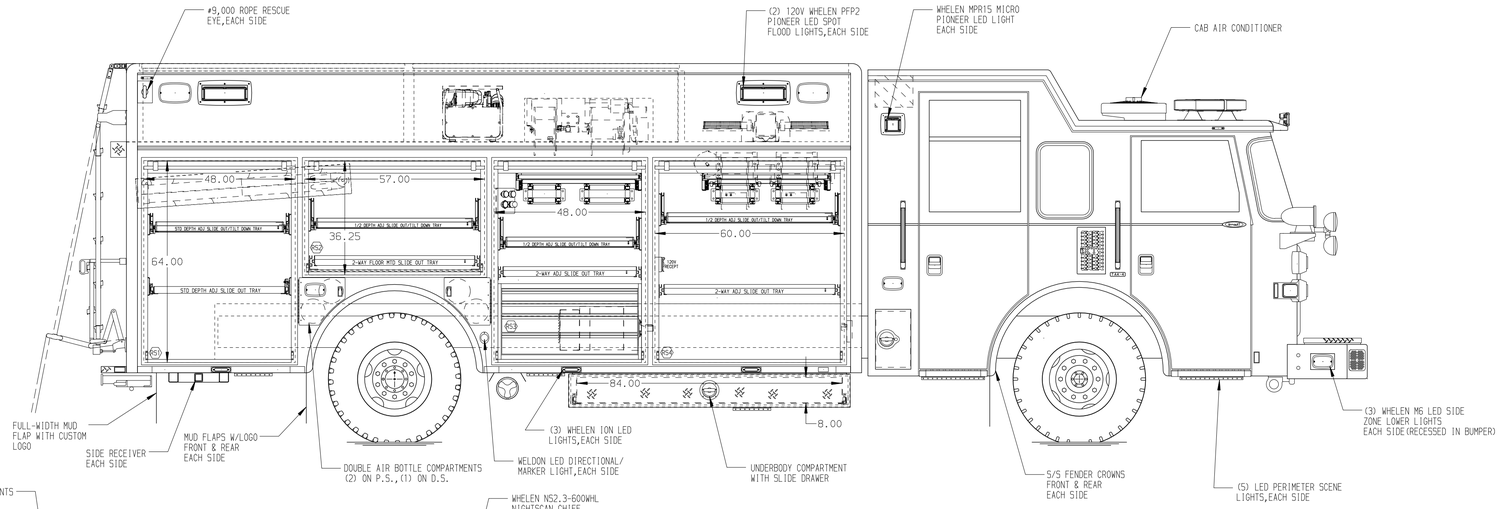

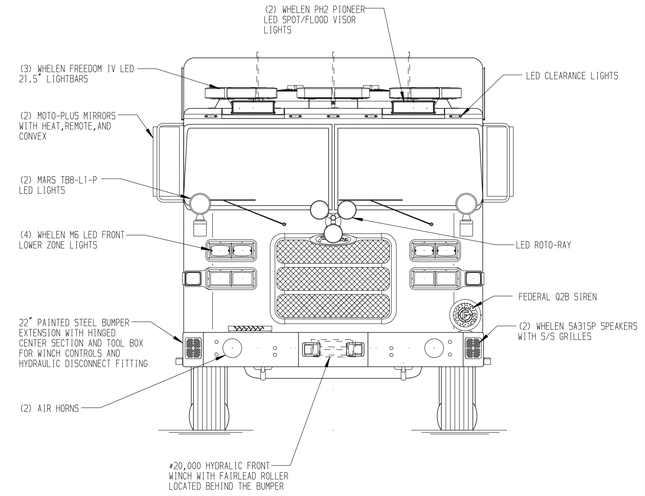

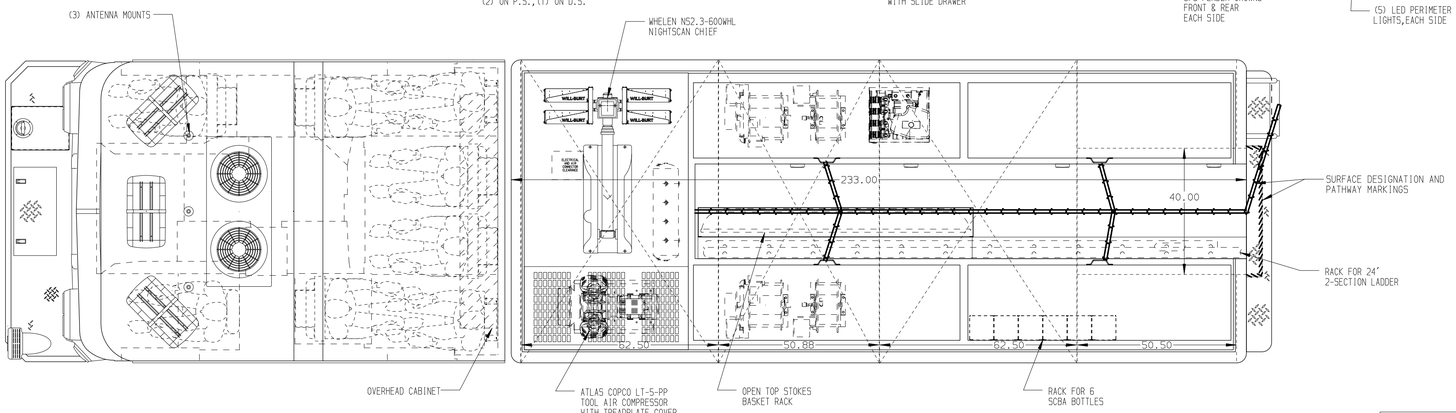

REAR COMPARTMENT CONTAINS THE FOLLOWING:

COMPARTMENT R1 CONTAINS:
- (1) RACK FOR LITTLE GIANT DEFENDER MODEL 22
- (1) 48"DP ADJ SLIDE OUT TRAY
-
-
-
-

LEFT SIDE COMPARTMENTS CONTAIN THE FOLLOWING:

COMPARTMENT LS1 CONTAINS:
- (1) STD DEPTH FLOOR MOUNTED TRAY WITH SIDE SLIDES AND TOOLBOARD
- (2) SCBA BRACKETS
- (3) STD DEPTH ADJ SHELVES
-

COMPARTMENT LS2 CONTAINS:
- (1) 1/2 DEPTH ADJ SLIDE OUT/TILT TRAY
- (1) 2-WAY FLOOR MOUNTED SLIDE OUT TRAY
-
-

COMPARTMENT LS3 CONTAINS:
- (1) 2-WAY ADJ SLIDE OUT TRAY
- (1) 1/2 DEPTH ADJ SLIDE OUT/TILT TRAY
- (1) ELECTRIC CORD REEL WITH 200' OF 10/3 YELLOW CORD
- (1) TOOL AIR REEL WITH 150' OF HOSE
- TOOL AIR REGULATOR AND GAUGES
- (1) SLIDE OUT BRACKET FOR ROLLER GUIDES
-

COMPARTMENT LS4 CONTAINS:
- (1) KUSSMAUL PUMP PLUS 1200 CHARGER
- (1) STD DEPTH ADJ SHELF
- (1) 2-WAY ADJ SLIDE OUT TRAY
- (1) CIRCUIT BREAKER PANEL
- (1) GENERATOR METER PANEL
- (1) NIGHT SCAN CONTROLLER
- (1) 15/20A,120V DUPLEX RECEPTACLE(GEN)
- (1) 15/20A,120V DUPLEX RECEPTACLE(SHOR)
- (1) TOOL AIR COMPRESSOR CONTROLLER
- (2) HYDRAULIC REELS W/100' OF HOSE
- (1) SLIDE OUT BRACKET FOR ROLLER GUIDES

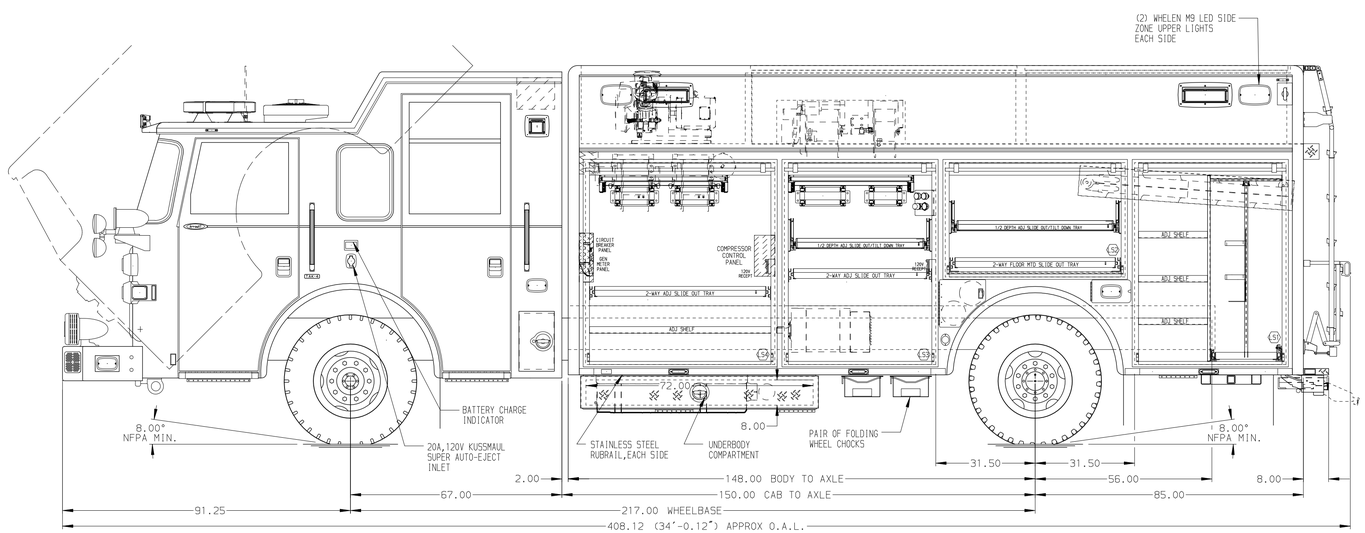

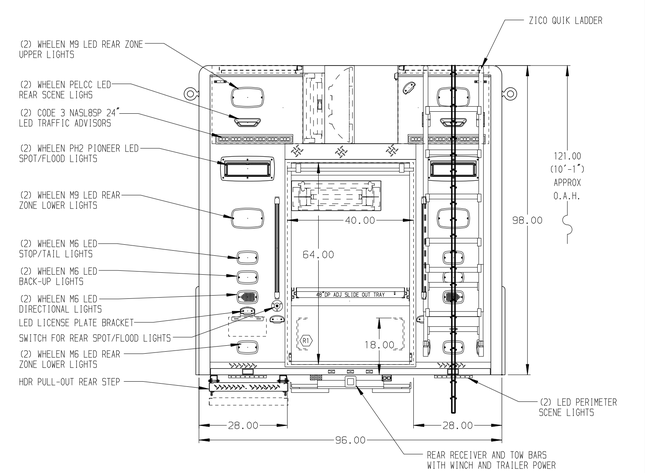

NOTE

DIMENSIONS SHOWN ARE APPROXIMATE AND ARE SUBJECT TO MINOR DEVIATIONS AS MAY OCCUR OR BE NECESSARY IN CONSTRUCTION.
MINOR DETAILS NOT SHOWN.

NOTES:
1. ONAN 35kW SINGLE PHASE PTO DRIVEN GENERATOR WITH SPLASH GUARD LOCATED BETWEEN THE FRAME RAILS
2. FLOOR IN CAB AND CREW CAB TO BE PADDED RUBBER
3. LED LIGHTS IN ALL BODY AND HATCH COMPARTMENTS
4. TURTLE TILE MATTING IN COMPARTMENT SHELVES AND TRAYS,FLOOR IN LS4,AND HATCH COMPARTMENT FLOORS
5. (2) 15/20A,120V DUPLEX RECEPTACLES LOCATED BEHIND THE DRIVER'S SEAT(1 GENERATOR,1 SHORELINE)
6. (1) MOUNTING PROVISION FOR HYDRAULIC POWER UNIT IN HATCH ABOVE RS2
7. AIR INLET WITH DISCONNECT COUPLING LOCATED IN DRIVER'S SIDE LOWER STEP WELL OF CAB

MAXIMUM O.A.H. 130.00"

MAXIMUM O.A.L. 415.00"

SIDE ROLL AND FRONTAL IMPACT PROTECTION

CLEAR DOOR WIDTH KEY	
AMDOR ROLL UP DOORS:	-2 1/4"
GORTITE ROLL UP DOORS:	-2 1/2"
PIERCE DOUBLE LAP DOORS:	-4 1/4"
PIERCE LIFT-UP LAP DOORS:	-1 1/2"
(EX: 60"F-F - 2 1/4"= 57 3/4" CLEAR) (F-F)= FRAME TO FRAME	

REV	DATE	BY	CH
A	24OCT18	DHE	CDK
B	28AUG18	DHE	CDK
A	23JUL18	DHE	CDK

CHASSIS DATA
MAKE: PIERCE
MODEL: AX6716

Pierce MANUFACTURING INC.

TITLE: HEAVY DUTY RESCUE NON-WALKIN
FOR: VILLAGE OF PORT CHESTER PORT CHESTER,NY JEREMY COHEN
DWG NO.: 32577AD

JOB NO. 32577
SCALE 1:24
DATE
DRAWN BY DHE 26JUN18
CHECKED BY AZU 26JUN18
SHEET SIZE D
SHEET NO. 1 OF 1

View File Created 24-OCT-2018 10:08:23