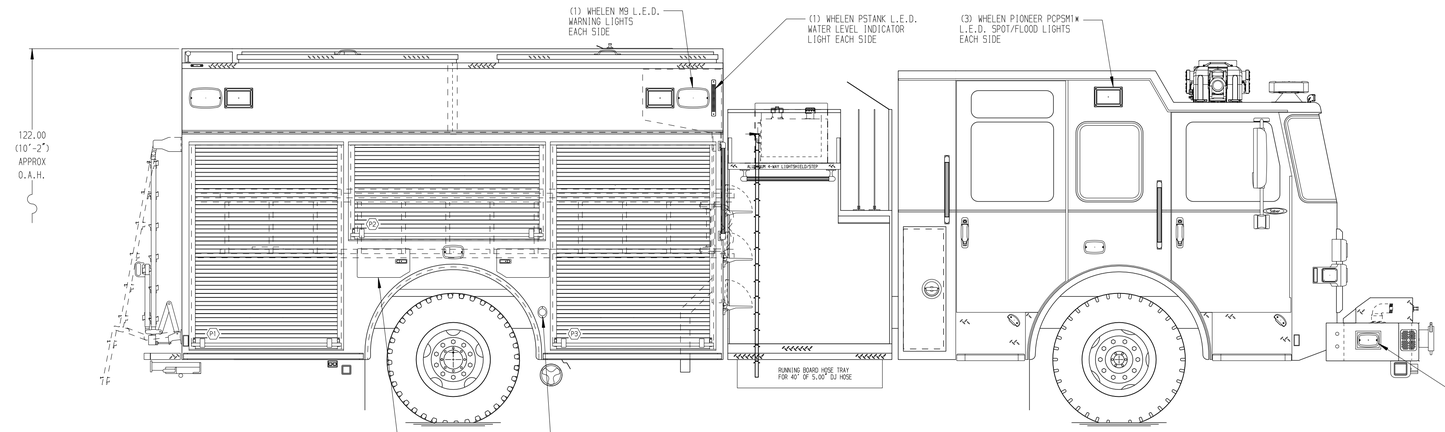

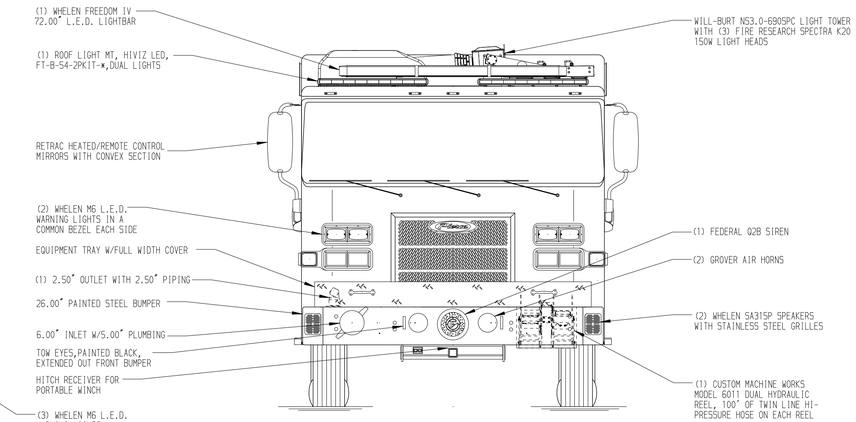

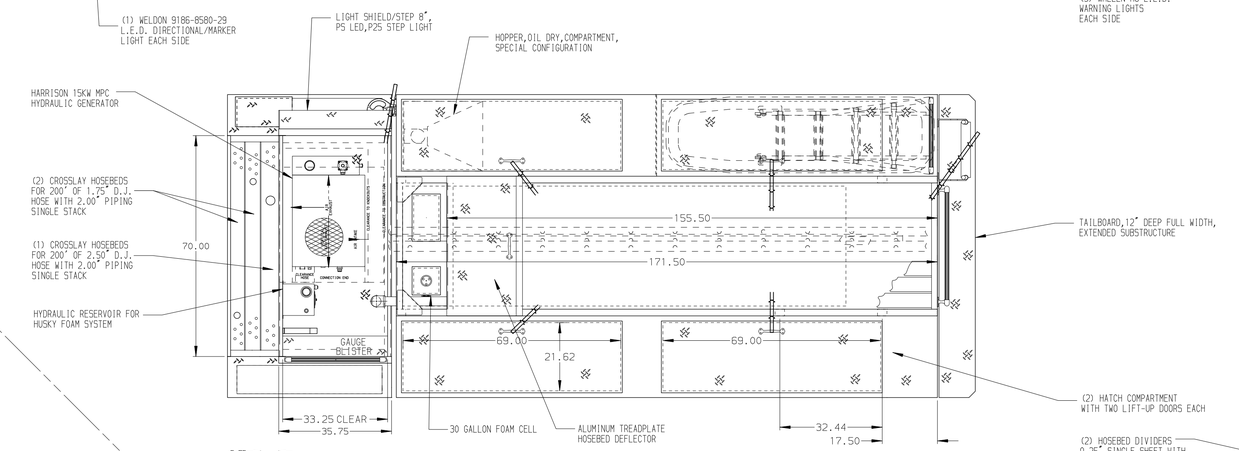

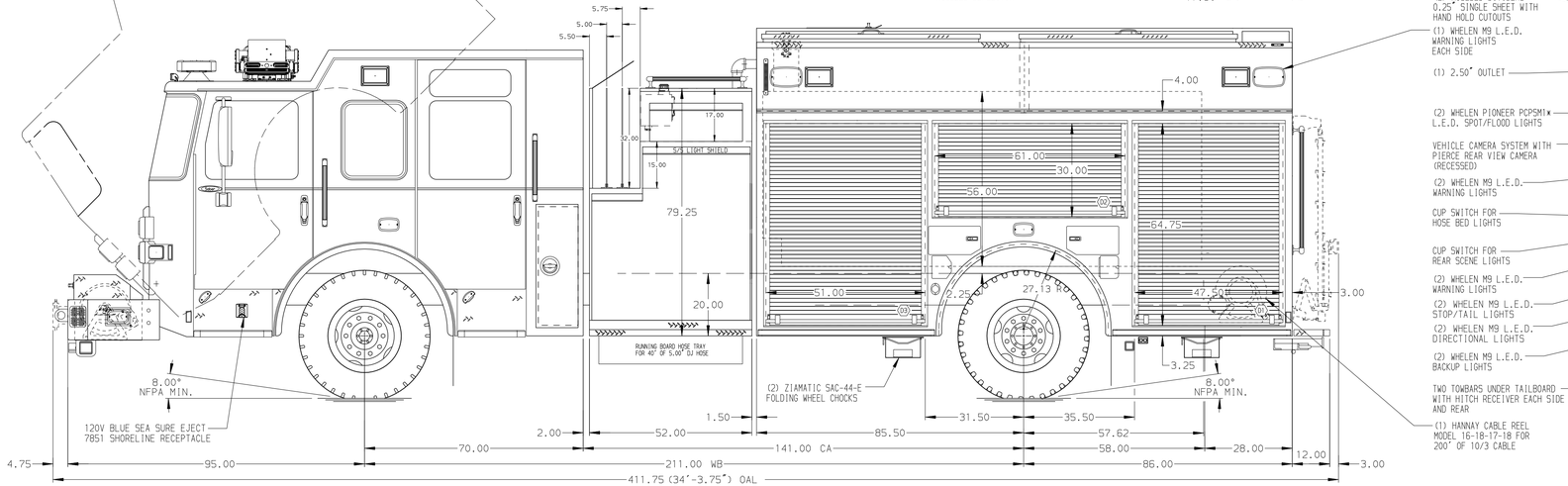

HOSEBED CAPACITIES
1. 280' OF 3.00" D.J. POLY HOSE
2. 900' OF 5.00" D.J. POLY HOSE
3. 280' OF 2.50" D.J. POLY HOSE

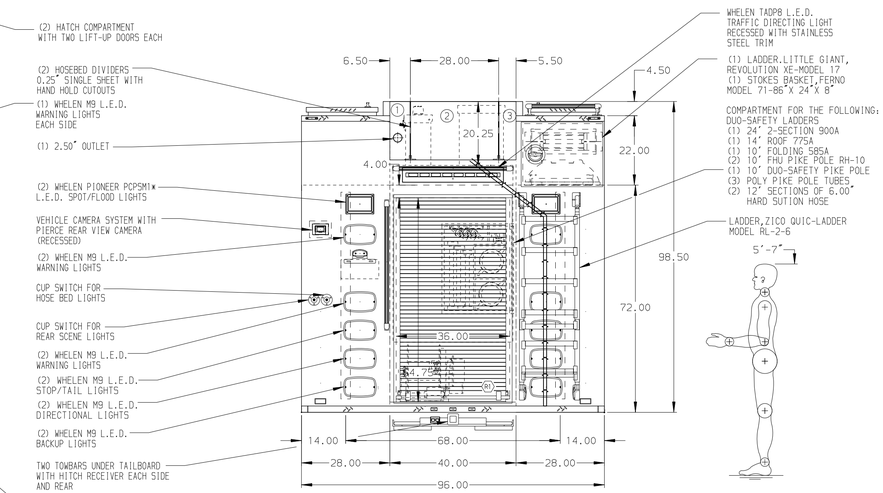

ALUMINUM BODY | MAXIMUM O.A.L. 412.00" | MAXIMUM O.A.H. 122.00" | SIDE ROLL AND FRONTAL IMPACT PROTECTION

NOTE
DIMENSIONS SHOWN ARE APPROXIMATE AND ARE SUBJECT TO MINOR DEVIATIONS AS MAY OCCUR OR BE NECESSARY IN CONSTRUCTION.
MINOR DETAILS NOT SHOWN.

REV	DATE	BY	CH
3	19OCT18	JLA	DDR
2	21SEP18	JLA	DDR
1	29JUN18	CDU	CCA

CHASSIS DATA
MAKE: PIERCE
MODEL: SABER FR

Pierce MANUFACTURING INC.

TITLE: 1500-D-720P W/30G FOAM,171",FULL HEIGHT AND DEPTH (3) X-LAYS,GENERATOR,LIGHT TOWER,REELS
FOR: BOTETOURT COUNTY FIRE & EMS, EAGLE ROCK, VIRGINIA
DWG NO.: 32589AD

JOB NO.	32589
SCALE	1:24
DATE	
DRAWN BY	JWO 18JUN18
CHECKED BY	CDU 19JUN18
SHEET SIZE	D
SHEET NO.	1 OF 1

View File Created 22-OCT-2018 12:32:47