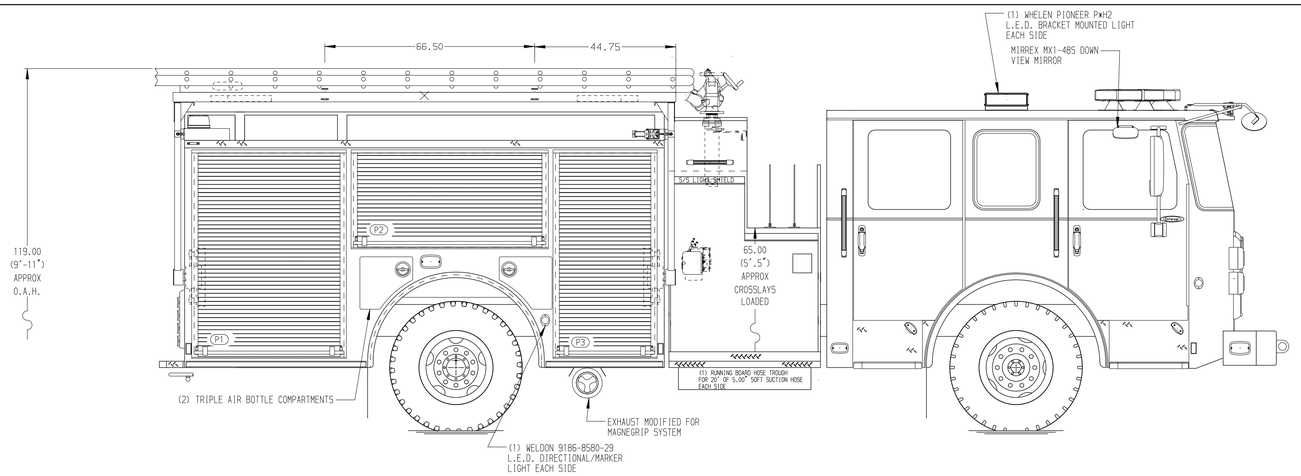

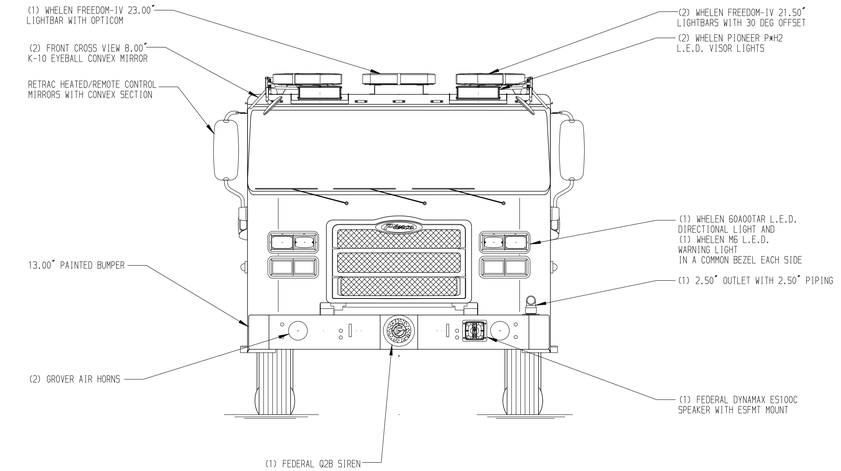

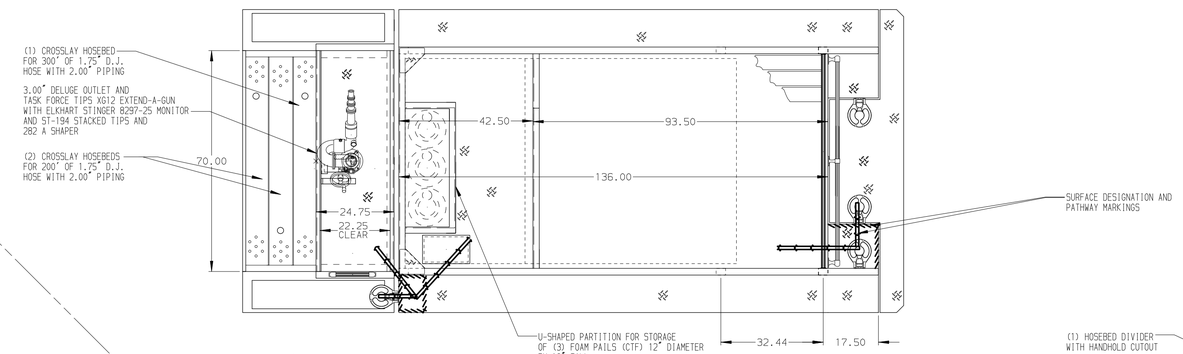

HOSEBED CAPACITIES

1. 1500' OF 5.00" HOSE
2. 600' OF 2.50" HOSE

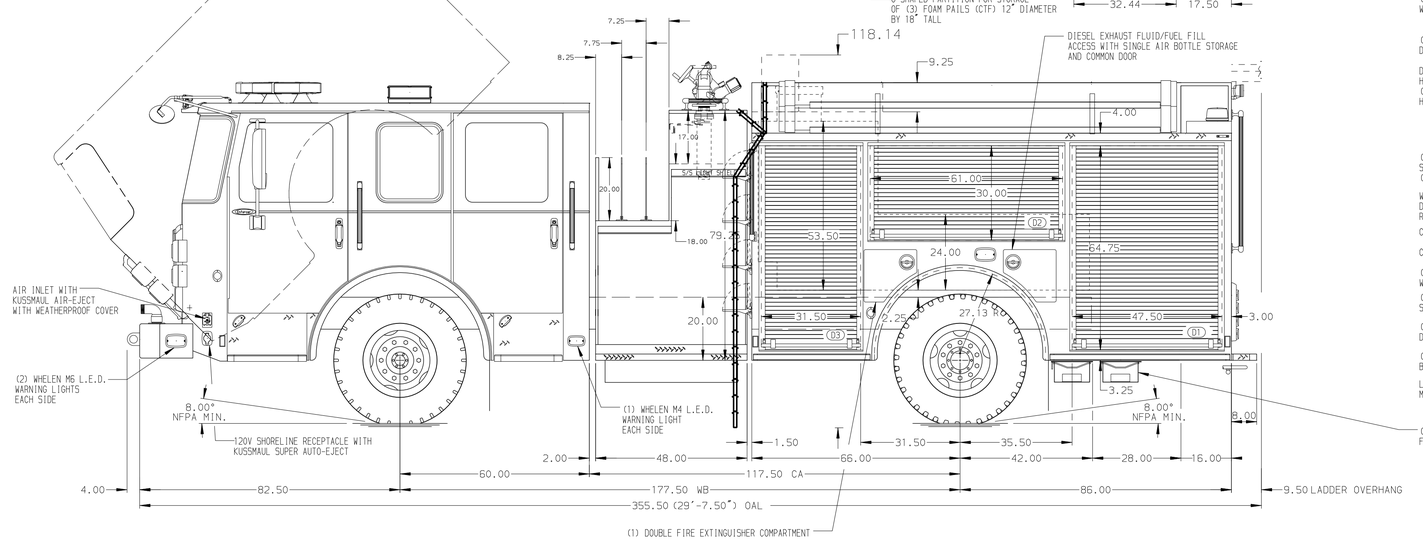

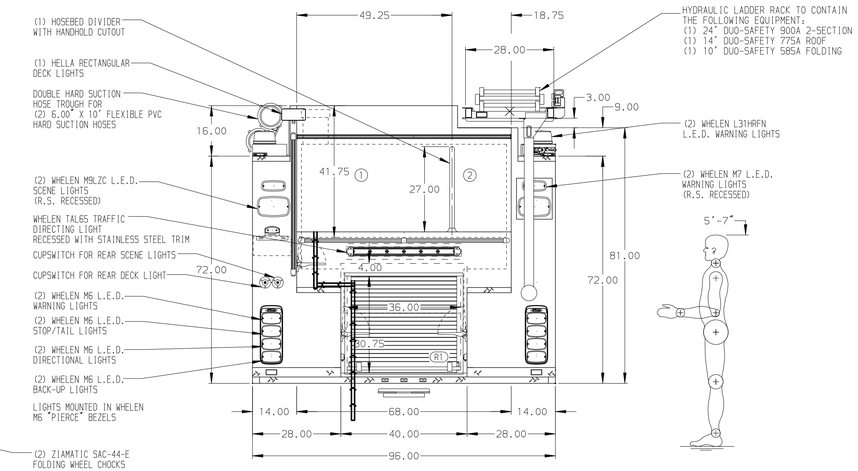

ALUMINUM BODY

MAXIMUM O.A.H. 119.00"

SIDE ROLL AND FRONTAL IMPACT PROTECTION

Pierce MANUFACTURING INC.

NOTE

DIMENSIONS SHOWN ARE APPROXIMATE AND ARE SUBJECT TO MINOR DEVIATIONS AS MAY OCCUR OR BE NECESSARY IN CONSTRUCTION.
MINOR DETAILS NOT SHOWN.

1. VOGEL LUBE SYSTEM PUMP LOCATED PER SHOP ORDER
2. BATTERY CHARGER LOCATED IN D3
3. BATTERY CHARGER INDICATOR LOCATED ON DRIVER'S SEAT RISER
4. DRIP PAN GUARD FOR ROLL-UP DOOR IN D1, D2, D3, R1, P1, P2, AND P3
5. ADJUSTABLE FULL WIDTH/ DEPTH SHELVES TWO LOCATED IN D1, D3, AND R1
6. ONE ALUMINUM MOUNTING PLATE IN D2 AND P2
7. EXTREME DUTY AUTOMATIC TIRE CHAINS TO BE PROVIDED AT THE REAR
8. AIR OUTLET WITH SHUT OFF VALVE ON THE DRIVER'S SIDE PUMP PANEL
9. (1) WHELEN 70C0ELZR L.E.D. LIGHT LOCATED AT THE FRONT OF THE HOSE BED

REV	DATE	BY	CH
7	04SEP18	LST	CSH
6	08AUG18	LST	CSH
5	03AUG18	LST	LAB
4	22JUN18	AMI	AZA

CHASSIS DATA	
MAKE	PIERCE
MODEL	ENFORCER
TITLE	1250-D-700 GAL POLY, 152" FH FDLER HYDRAULIC LADDER RACK, (3) X-LAYS, DELUGE
FOR	NORWALK FIRE DEPARTMENT NORWALK, CONNECTICUT
DWG NO.	32608AD

JOB NO.	32608
SCALE	1:24
DATE	
DRAWN BY	LST 08JUN18
CHECKED BY	AZA 14JUN18
SHEET SIZE	D
SHEET NO.	1 OF 1

View File Created 05-SEP-2018 06:17:41