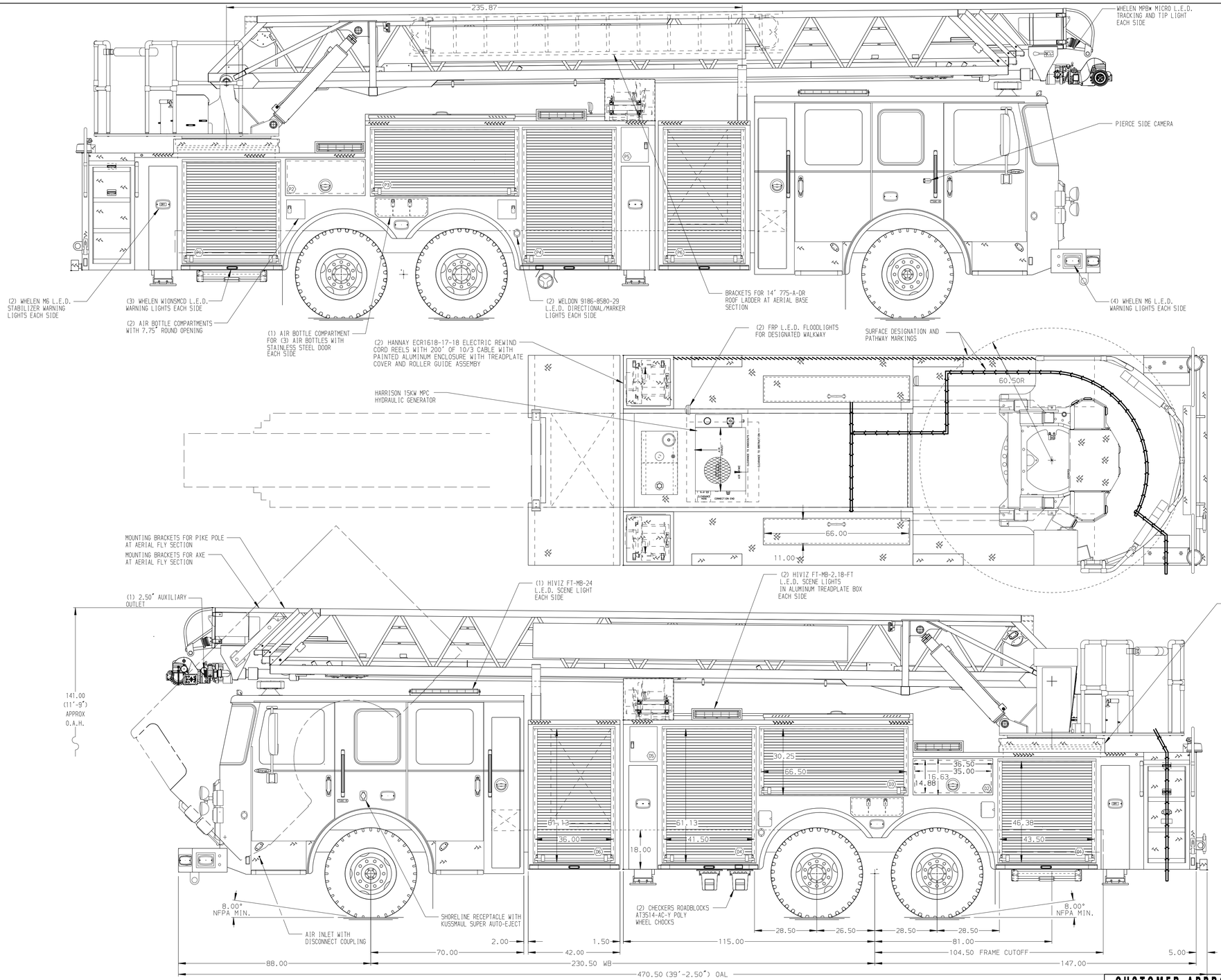

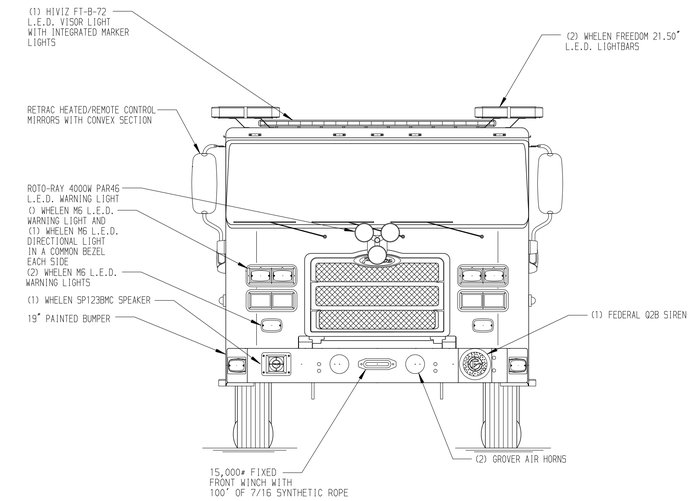

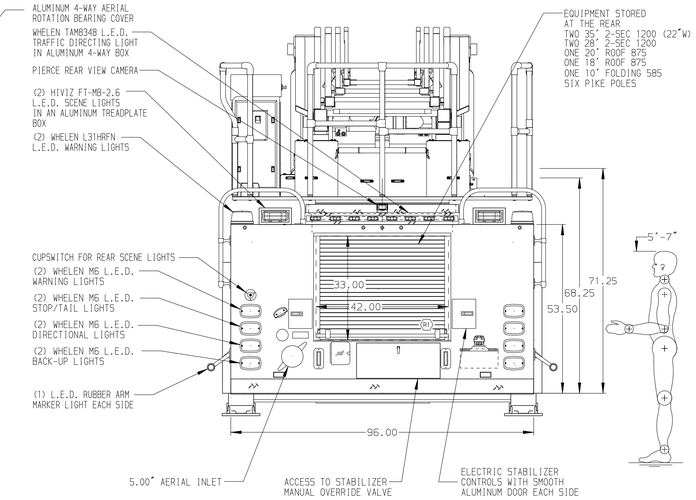

STAINLESS STEEL BODY

SIDE ROLL AND FRONTAL IMPACT PROTECTION

NOTE

DIMENSIONS SHOWN ARE APPROXIMATE AND ARE SUBJECT TO MINOR DEVIATIONS AS MAY OCCUR OR BE NECESSARY IN CONSTRUCTION.
MINOR DETAILS NOT SHOWN.

1. AIR OUTLET WITH SHUT-OFF VALVE LOCATED TBD
2. BATTERY CHARGER LOCATED IN COMPARTMENT D6
3. BATTERY CHARGE INDICATOR LOCATED ON DRIVER'S SEAT RISER
4. ONE ADJUSTABLE FULL WIDTH/FULL DEPTH SHELF IN COMPARTMENT TBD
5. ONE SLIDE OUT ADJUSTABLE TRAY ON SCENE SLIDES IN COMPARTMENT TBD
6. ONE TILT/SLIDE OUT ADJUSTABLE SHELF ON SCENE SLIDES IN COMPARTMENT TBD
7. ONE FLOOR MOUNTED SLIDE OUT TRAY ON SCENE SLIDES IN COMPARTMENT TBD
8. ONE SWING OUT ALUMINUM TOOLBOARD IN COMPARTMENT TBD
9. ONE VERTICAL DIVIDER IN COMPARTMENT P6
10. STOKES BASKET MOUNTING IN TRANSVERSE COMPARTMENT D6/P6
11. PAC TRAC ON THE WALL OF COMPARTMENT TBD
12. CIRCUIT BREAKER PANEL IN COMPARTMENT D6
13. MOUNTING FOR TWO 6' PIKE POLES ON BUMPER
14. ONE DUPLEX SHORELINE RECEPTACLE IN FORWARD FACING EMS COMPARTMENT
15. ONE 7-PLACE SHORELINE RECEPTACLE IN THE FORWARD FACING EMS CABINET
16. ONE 6-PLACE RECEPTACLE STRIP IN BODY COMPARTMENT TBD
17. ONE WATERPROOF RECEPTACLE TBD
18. FOLDING STEPS ON AERIAL DEVICE
19. L.E.D. LIGHTING ON AERIAL LADDER SECTIONS
20. 2-WAY INTERCOM SYSTEM BETWEEN AERIAL TIP AND TURNTABLE
21. AERIAL PEDESTAL RAISED 3.00"
22. LIFTING EYE RESCUE ATTACHMENT AT AERIAL TIP
23. LYFEPULLEY RESCUE SYSTEM AT AERIAL TIP WITH ROPE TIE BAR AT BASE SECTION
24. 13.00" SHORTENED AERIAL EGRESS
25. LITTLE GIANT REVOLUTION 17 IN COMPARTMENT TBD

REV	DATE	BY	CH

CUSTOMER APPROVAL

APPROVED BY:

DATE:

CHASSIS DATA

MAKE: PIERCE

MODEL: ENFORCER

Pierce MANUFACTURING INC.

TITLE: 105' AERIAL LADDER & BODY ASSEMBLY NO PUMP/NO TANK

FOR: WINCHESTER FIRE AND RESCUE DEPARTMENT WINCHESTER, VIRGINIA

DWG NO. 32620AD

JOB NO.	32620
SCALE	1:24
DATE	
DRAWN BY	MWA
DATE	01MAY18
CHECKED BY	CRI
DATE	03MAY18
SHEET SIZE	D
SHEET NO.	1 OF 1

View File Created 03-MAY-2018 07:35:02