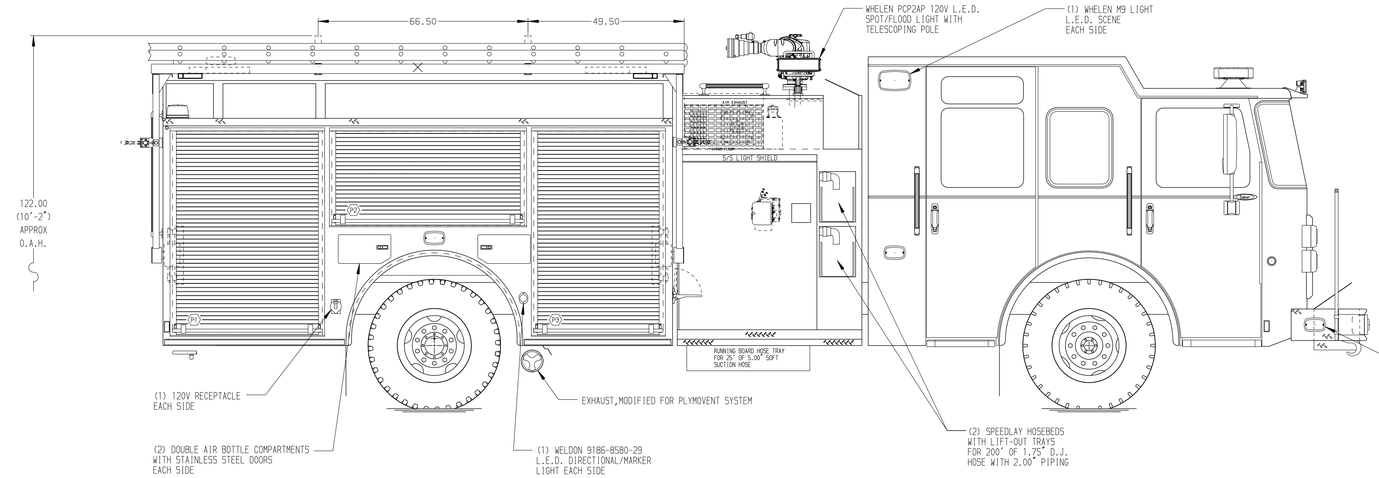

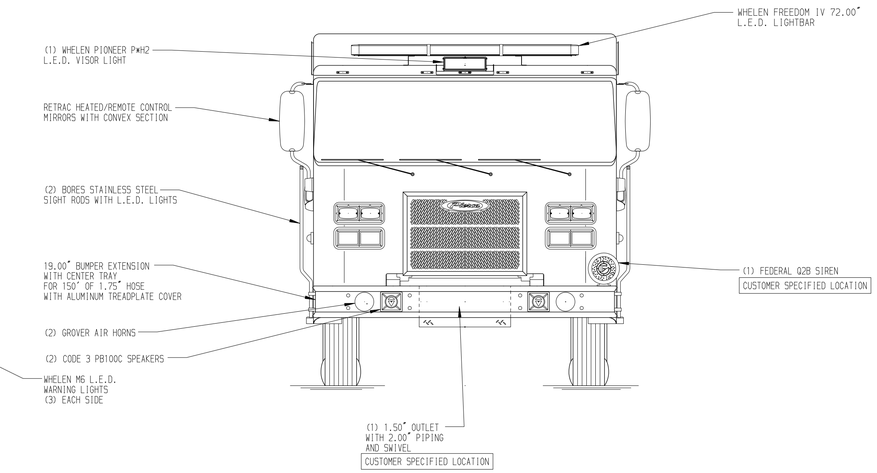

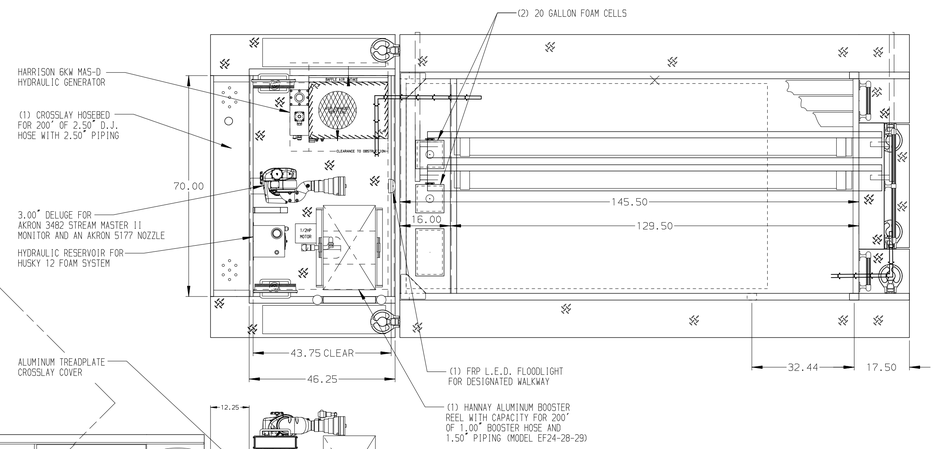

HOSEBED CAPACITIES

1. 200' OF 2.50" D.J. POLY HOSE
2. 250' OF 3.00" D.J. POLY HOSE
3. 1000' OF 5.00" D.J. POLY HOSE

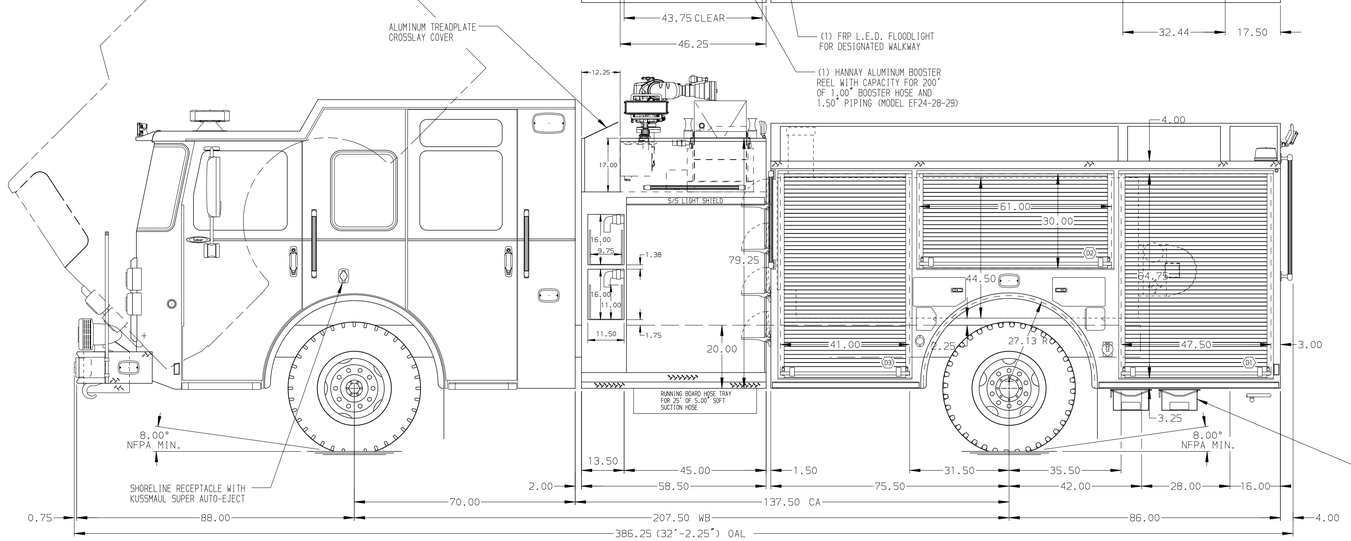

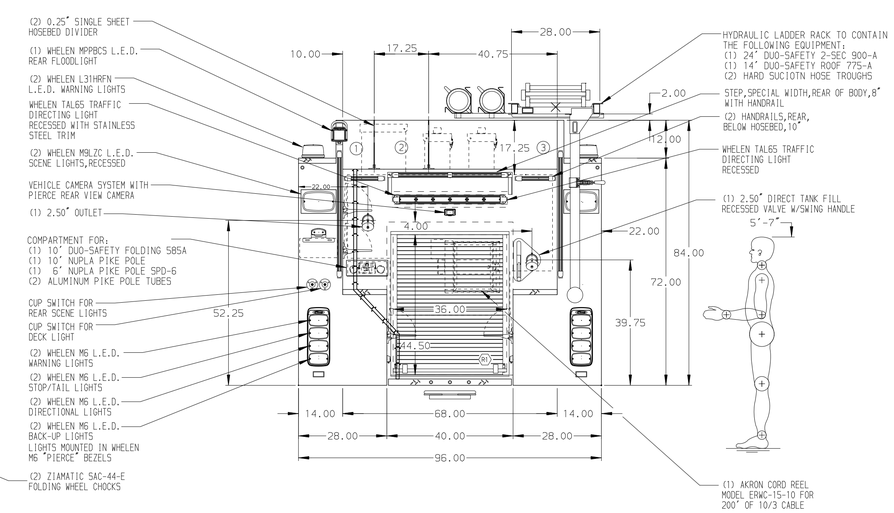

ALUMINUM BODY

SIDE ROLL AND FRONTAL IMPACT PROTECTION

NOTE

DIMENSIONS SHOWN ARE APPROXIMATE
AND ARE SUBJECT TO MINOR DEVIATIONS
AS MAY OCCUR OR BE NECESSARY IN
CONSTRUCTION.
MINOR DETAILS NOT SHOWN.

REV	DATE	BY	CH
V	27SEP18	JLA	DDR
V	10SEP18	JLA	GSC
V	13JUL18	JWO	CDU

CHASSIS DATA
MAKE: PIERCE
MODEL: SABER FR

Pierce MANUFACTURING INC.

TITLE: 1250D-1000P W/40G FOAM.161",FULL HEIGHT,FDLER
(2) SPD-LAYS,(1) X-LAY,DELUGE,GENERATOR,REELS

FOR: ST. JAMES FIRE DEPARTMENT INC
ST. JAMES, NORTH CAROLINA

DWG NO.: 32641AD

JOB NO. 32641
SCALE 1:24
DATE
DRAWN BY JWO 19JUN18
CHECKED BY CDU 19JUN18
SHEET SIZE D
SHEET NO. 1 OF 1

View File Created 27-SEP-2018 14:11:17