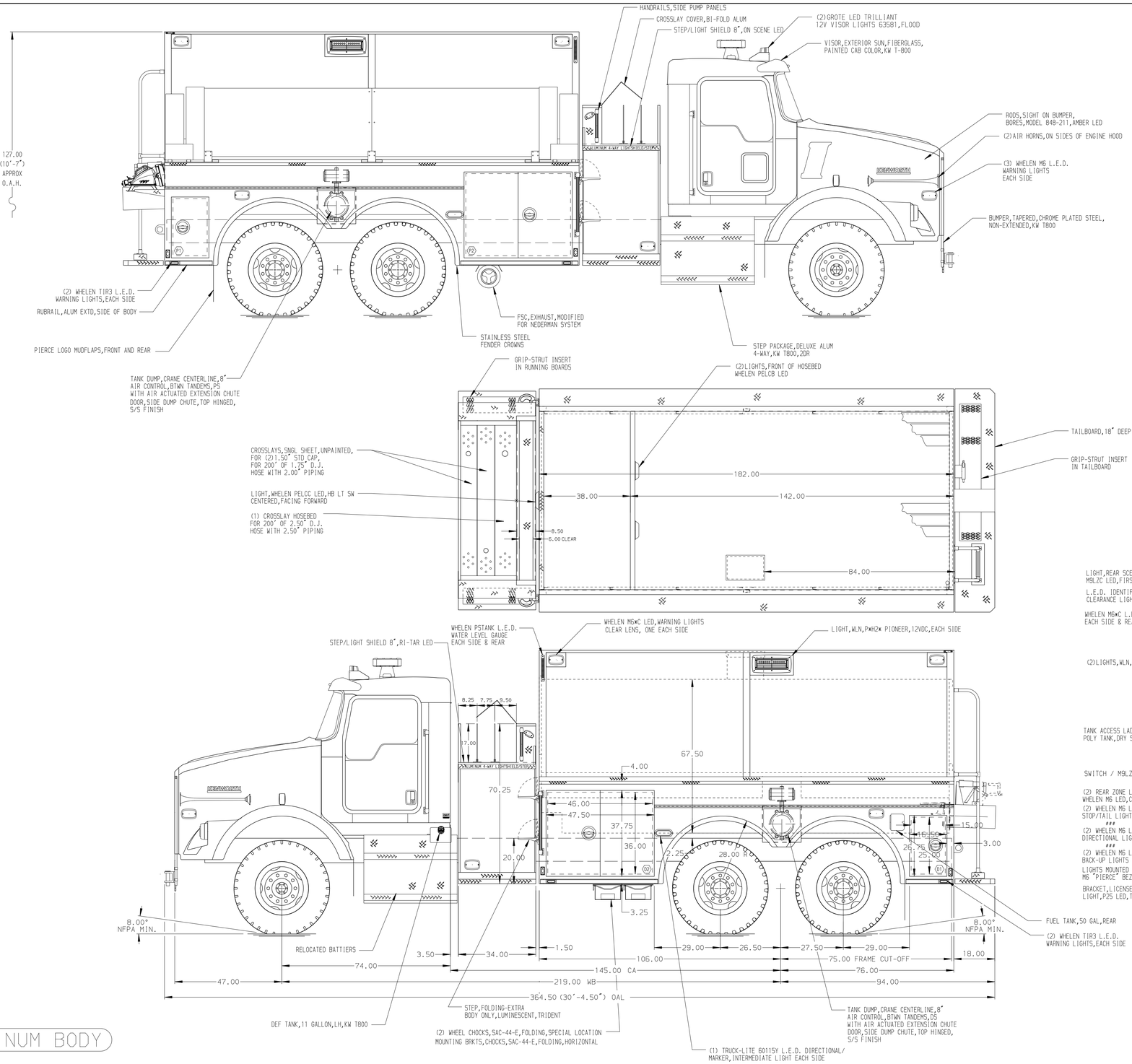

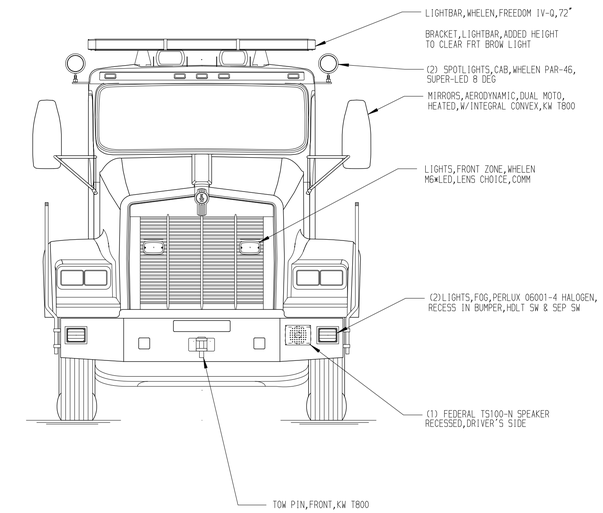

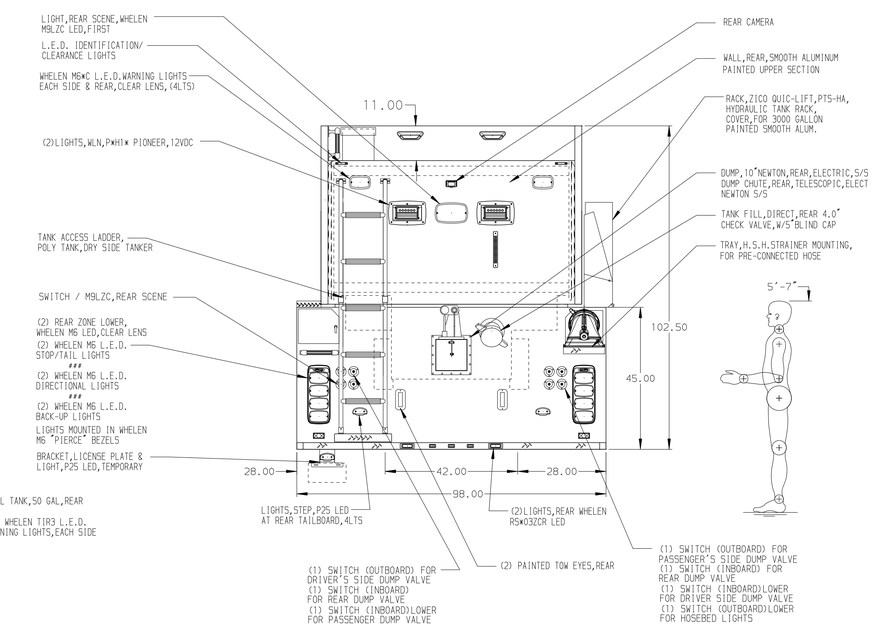

ALUMINUM BODY

NOTE

DIMENSIONS SHOWN ARE APPROXIMATE AND ARE SUBJECT TO MINOR DEVIATIONS AS MAY OCCUR OR BE NECESSARY IN CONSTRUCTION.
MINOR DETAILS NOT SHOWN.

REV	DATE	BY	CH
V	09NOV18	JLA	GSC
B	18OCT18	JLA	CAG
V	17JUL18	RWI	JAF

CHASSIS DATA

MAKE	MODEL
KW	T800

Pierce MANUFACTURING INC.

TITLE: 1000-D-3000 POLY,182" DRYSIDE BODY,SIDE/REAR DUMPS 34"SIDE CONTROL,(2)1.50",(1)2.50" CROSSLAYS

FOR: SOUTH METRO FIRE RESCUE AUTHORITY CENTENNIAL,COLORADO

DWG NO.: 32692AD

JOB NO.	SCALE	DRAWN BY	CHECKED BY	SHEET SIZE	SHEET NO.
32692	1:24	JAF	RWI	D	1 OF 1

DATE: 06JUN18 / 07JUN18

View File Created 09-NOV-2018 14:02:49