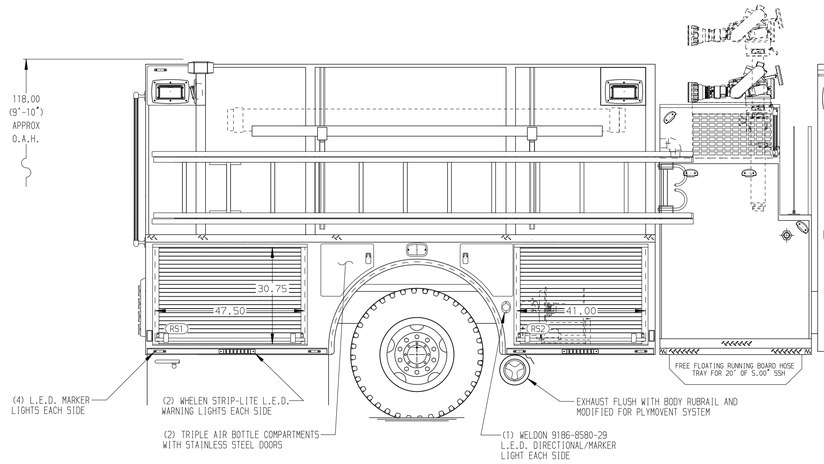

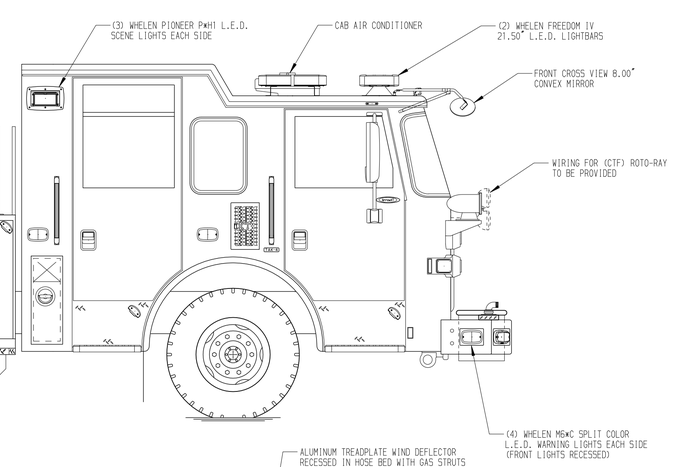

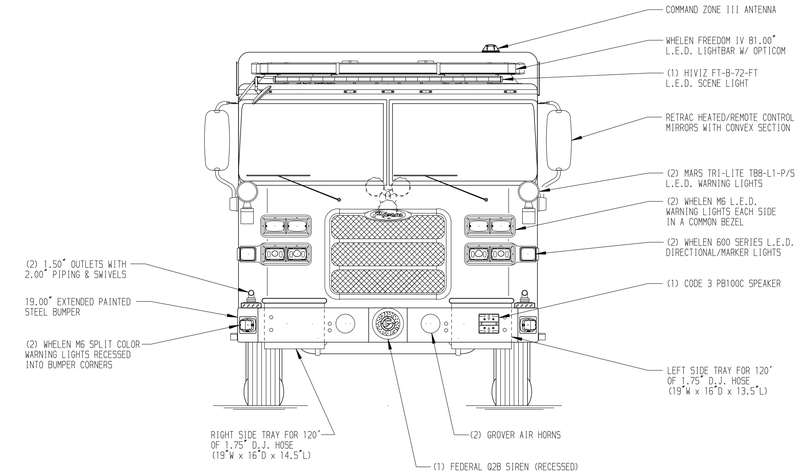

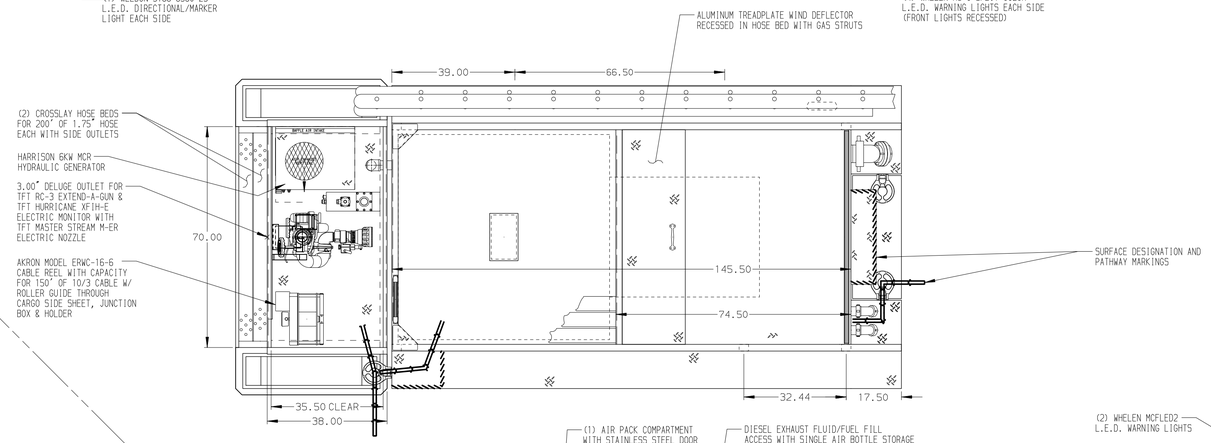

HOSEBED CAPACITIES

1. - 400' OF 1.75" MERCEDES HOSE
2. - 200' OF 2.50" MERCEDES HOSE
3. -1050' OF 5.00" MERCEDES HOSE
4. - 200' OF 3.00" MERCEDES HOSE
5. - 200' OF 3.00" MERCEDES HOSE

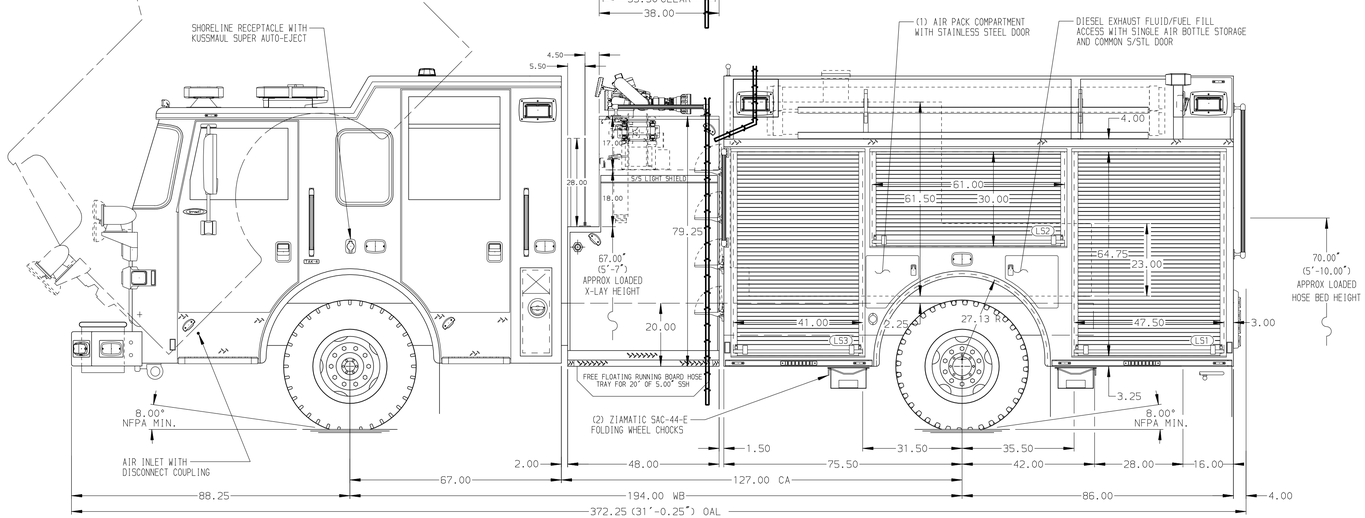

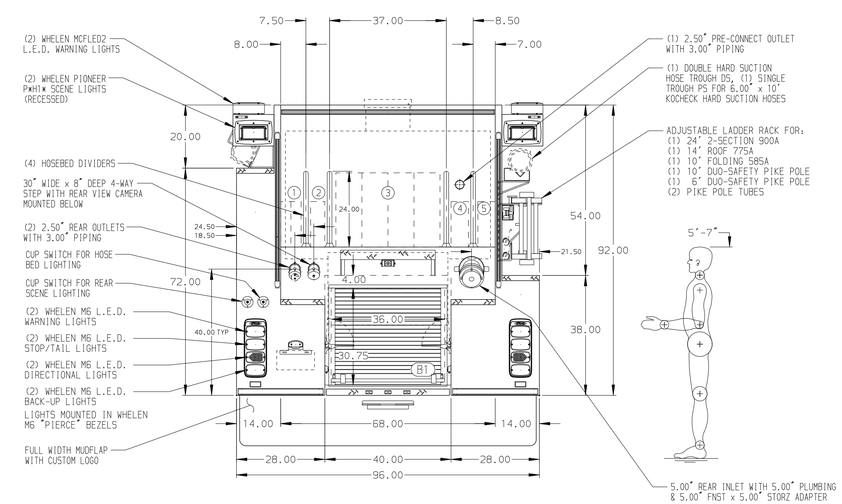

ALUMINUM BODY | MAXIMUM O.A.H. 126.00" | MAXIMUM O.A.L. 384.00" | SIDE ROLL AND FRONTAL IMPACT PROTECTION

NOTE

DIMENSIONS SHOWN ARE APPROXIMATE AND ARE SUBJECT TO MINOR DEVIATIONS AS MAY OCCUR OR BE NECESSARY IN CONSTRUCTION.
MINOR DETAILS NOT SHOWN.

1. BATTERY CHARGER & AIR COMPRESSOR LOCATED BEHIND DRIVER'S SEAT
2. BATTERY CHARGER INDICATOR LOCATED NEAR DRIVER'S SEAT RISER WITH BRACKET
3. DUAL L.E.D. LIGHT STRIPS LOCATED IN HOSE BED
4. DRIP PAN GUARD FOR ROLL-UP DOOR LOCATED ON ALL BODY COMPARTMENT DOORS
5. ONE FLOOR MOUNTED SLIDE-OUT TRAY IN COMPARTMENTS LS1, RS1, & B1
6. ONE VERTICAL DIVIDER IN COMPARTMENT RS2
7. ONE FULL WIDTH/DEPTH SHELF IN COMPARTMENTS LS1 & LS3
8. ALUMINUM PEGBOARD WITH TRACKS ON THE BACK WALL OF COMPARTMENTS LS2, LS3, & LS1 (UPPER)
9. CIRCUIT BREAKER PANEL IN COMPARTMENT LS3
10. AIR INLET WITH DISCONNECT COUPLING LOCATED IN DRIVER'S STEP WELL
11. ONE HANNAY ELFCR1620-14-16 CABLE REEL WITH CAPACITY FOR 150' OF 10/3 CABLE W/ JUNCTION BOX & JUNCTION BOX HOLDER LOCATED IN COMPARTMENT RS2
12. ONE 15A 120V 6-PLACE RECEPTACLE STRIP LOCATED BEHIND DRIVER'S SEAT
13. ONE 15A 120V 4-PLACE RECEPTACLE STRIP LOCATED IN EACH EMS COMPARTMENT
14. ONE 15/20A 120V DUPLEX RECEPTACLE TO BE INSTALLED IN LS1 & RS1
15. AMDOR LUMABAR L.E.D. STRIP LIGHTING IN CARGO AREAS

REV	DATE	BY	CH
1	19NOV18	GVH	RWA
2	04OCT18	GVH	RWA
3	06SEP18	GVH	RWA
4	20JUL18	GVH	CDU

CHASSIS DATA — MAKE: PIERCE — MODEL: ARROW XT

Pierce MANUFACTURING INC.

TITLE: 1750-D-1000P, 161" PUMPER, FULL HEIGHT LS, LOW PS (2) CROSSLAYS, DELUGE, GENERATOR, CAFS

FOR: HOPE FIRE ENGINE & HOSE CO. NO. 1, MANHEIM, PENNSYLVANIA

DWG NO.: 32704AD

JOB NO.	32704
SCALE	1:24
DATE	
DRAWN BY	GVH 13JUL18
CHECKED BY	CDU 13JUL18
SHEET SIZE	D
SHEET NO.	1 OF 1

View File Created 27-NOV-2018 07:40:00