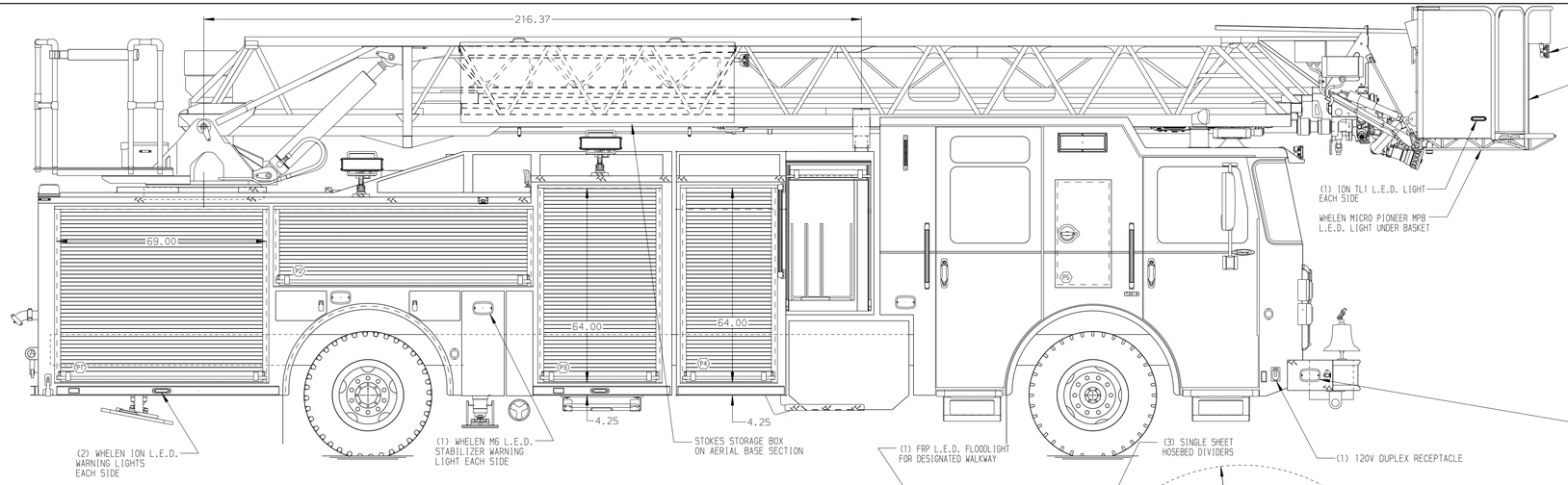

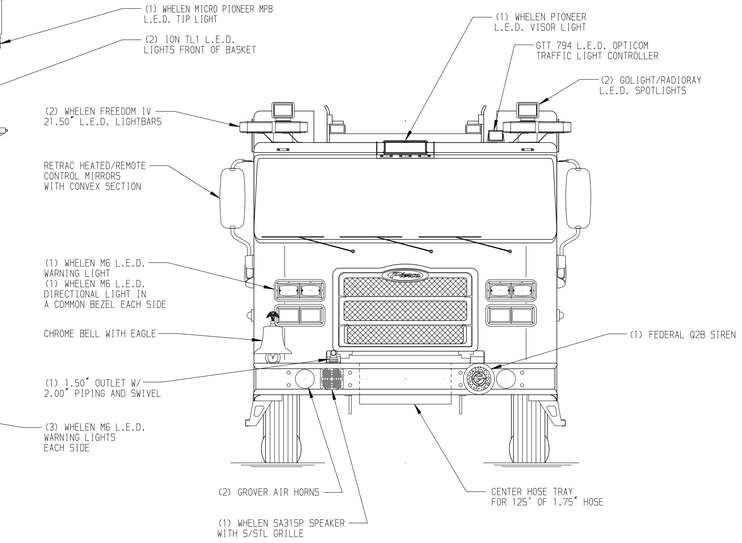

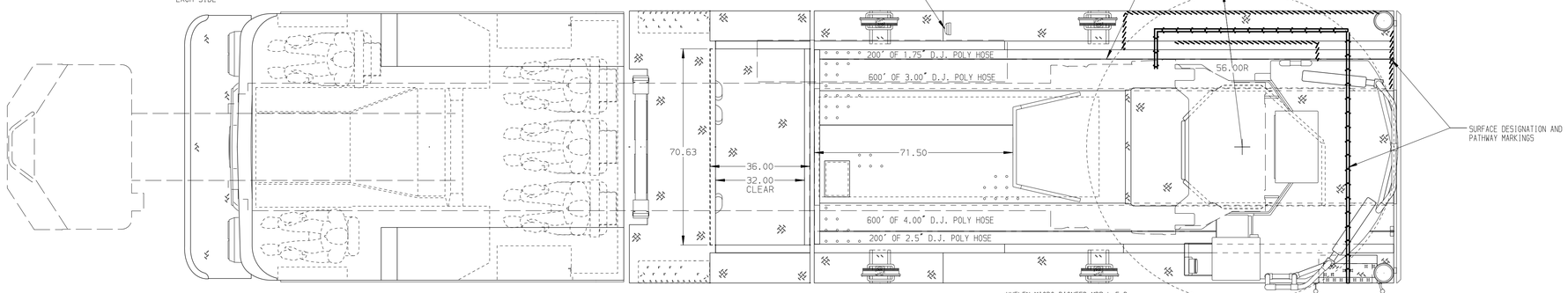

BODY	WATER TANK
110' Single Axle Platform Aluminum Body PUC	500 Gallon Poly Water Tank
COMPT,DRIVER SIDE FRONT	Foam System
Full Height Rollup Forward	Foam System Not Required
COMPT,DRIVER SIDE REAR	Foam Cell
Full Height Rollup Rearward	Foam Cell Not Required
COMPT,PASSENGER SIDE FRONT	
Full Height Rollup Forward	
COMPT,PASSENGER SIDE REAR	
Full Height Rollup Rearward	

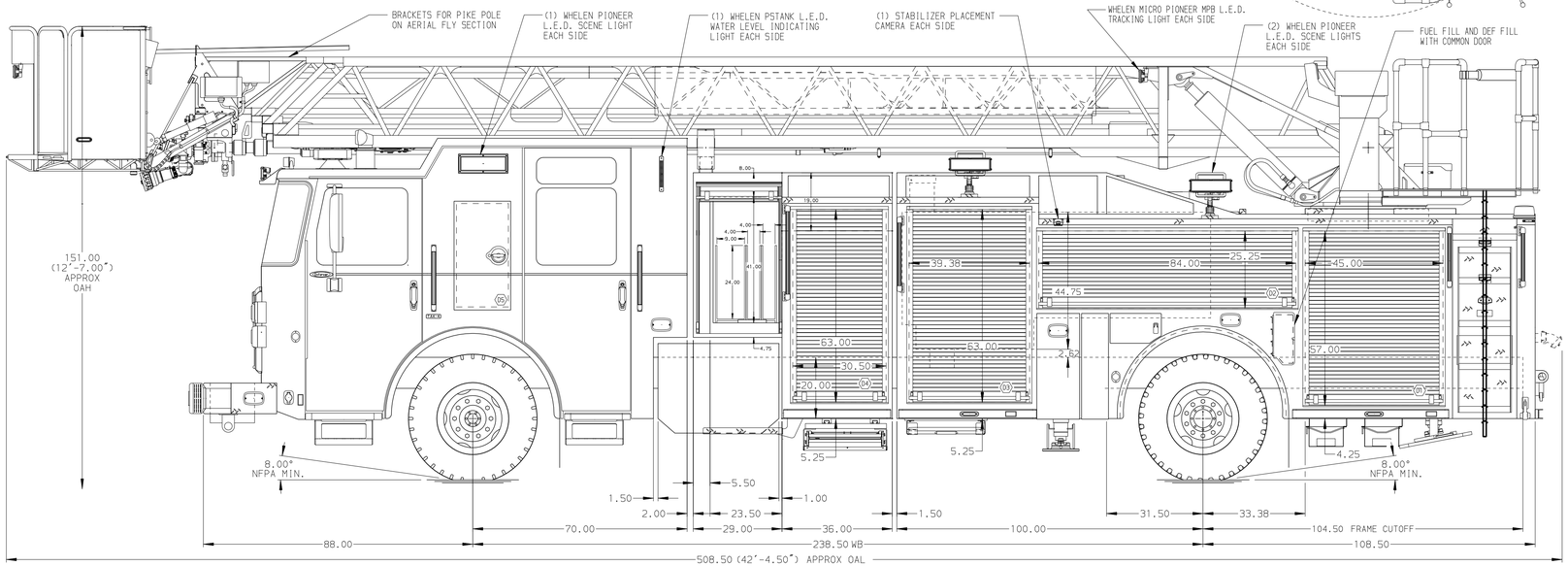

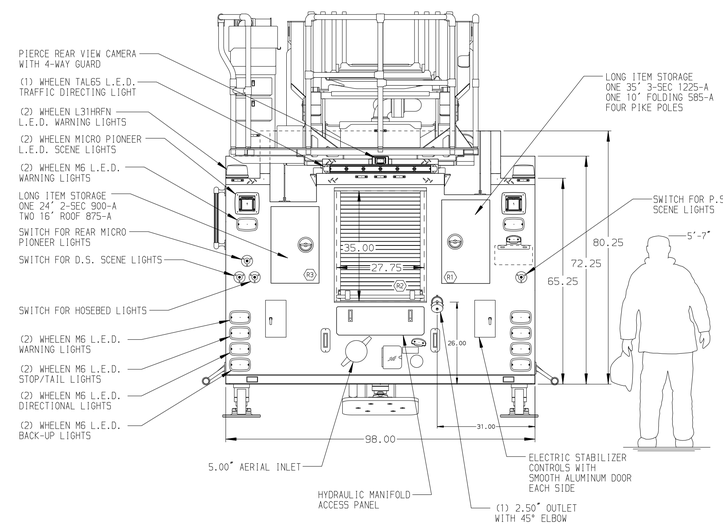

CHASSIS	CAB	AXLE,FRONT,CUSTOM	TRANSMISSION	PUMPHOUSE	CROSSLAYS,1.50"	SPEEDLAYS
Enforcer Chassis, PUC	7010 Enforcer Cab, PUC, Notched	24,000 Lb TAK-4 Axle	Allison 5th Gen, 4500 EVS P	Control Zone, PAL/PAP PUC	(2) 1.50", Poly Trays, 200'	Speedlays Not Required
ENGINE	BUMPER	AXLE,REAR		PUMP	CROSSLAYS,2.50"	GENERATOR
505 HP DD13 Engine	19" Extended Stainless Steel	33,500 Lb Meritor Axle		1500 GPM Pierce PUC	(1) 2.50" Poly Tray, 200'	Generator Not Required

NOTE

DIMENSIONS SHOWN ARE APPROXIMATE AND ARE SUBJECT TO MINOR DEVIATIONS AS MAY OCCUR OR BE NECESSARY IN CONSTRUCTION.
MINOR DETAILS NOT SHOWN.

1. SHORELINE RECEPTACLE WITH KUSSMAUL SUPER AUTO-EJECT LOCATED ON DRIVER SIDE CAB CORNER
2. AIR INLET WITH DISCONNECT COUPLING IN THE DRIVER SIDE STEPWELL WITH COVER
3. BATTERY CHARGER LOCATED IN COMPARTMENT PER SHOP ORDER
4. BATTERY CHARGE INDICATOR LOCATED ON THE DRIVER SIDE SEAT RISER
5. FIVE ADJUSTABLE SHELVES IN COMPARTMENTS PER SHOP ORDER
6. TWO FLOOR MOUNTED SLIDE-OUT TRAYS IN COMPARTMENT PER SHOP ORDER
7. ONE SWING-OUT TOOLBOARD IN COMPARTMENT PER SHOP ORDER
8. ONE CTECH (3) DRAWER ASSEMBLY IN COMPARTMENT PER SHOP ORDER
9. XANTREX INVERTER LOCATED PER SHOP ORDER
10. ONE DUPLEX RECEPTACLE LOCATED IN EACH EMS COMPARTMENT PER SHOP ORDER
11. ONE DUPLEX RECEPTACLE LOCATED IN THE CAB PER SHOP ORDER
12. NON-RAISED AERIAL PEDESTAL
13. 1250 GPM HIGH FLOW WATERWAY

REV	DATE	BY	CH
1	04SEP18	TKA	KBO
0	29JUN18	TKA	KBO

CHASSIS DATA
MAKE: PIERCE
MODEL: ENFORCER

Pierce MANUFACTURING INC.

TITLE: 110' ASCENDANT AERIAL PLATFORM AND BODY ASSEMBLY
FOR: SANDY CITY CORPORATION, SANDY, UTAH
DWG NO.: 32734AD

JOB NO.	32734
SCALE	1:24
DRAWN BY	TKA
DATE	23MAY18
CHECKED BY	GRM
DATE	23MAY18
SHEET SIZE	D
SHEET NO.	1 OF 1

View File Created 10-SEP-2018 09:31:08