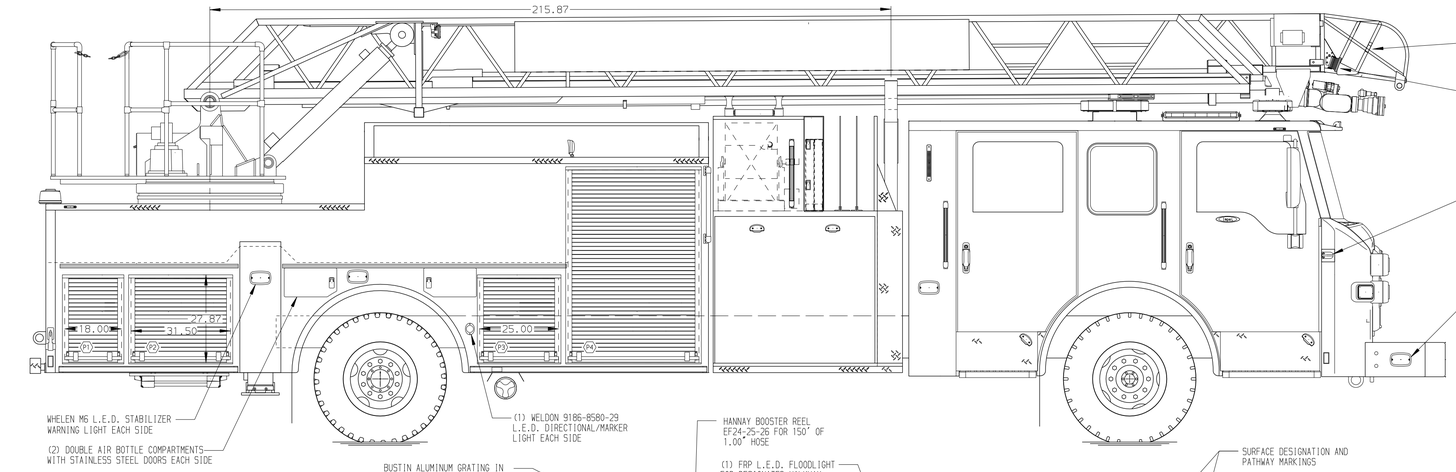

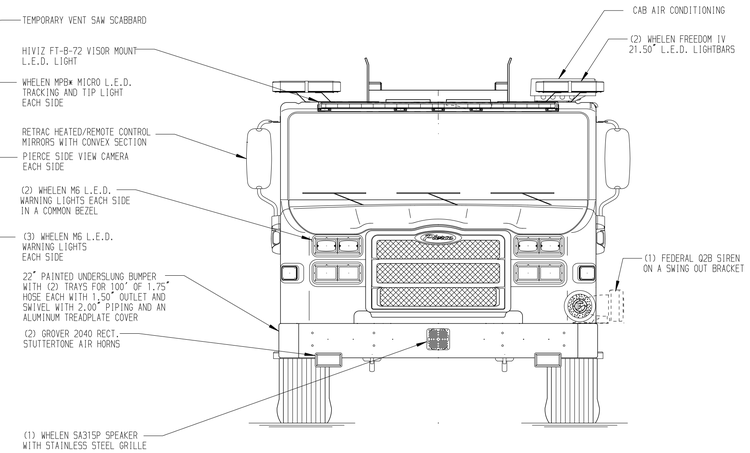

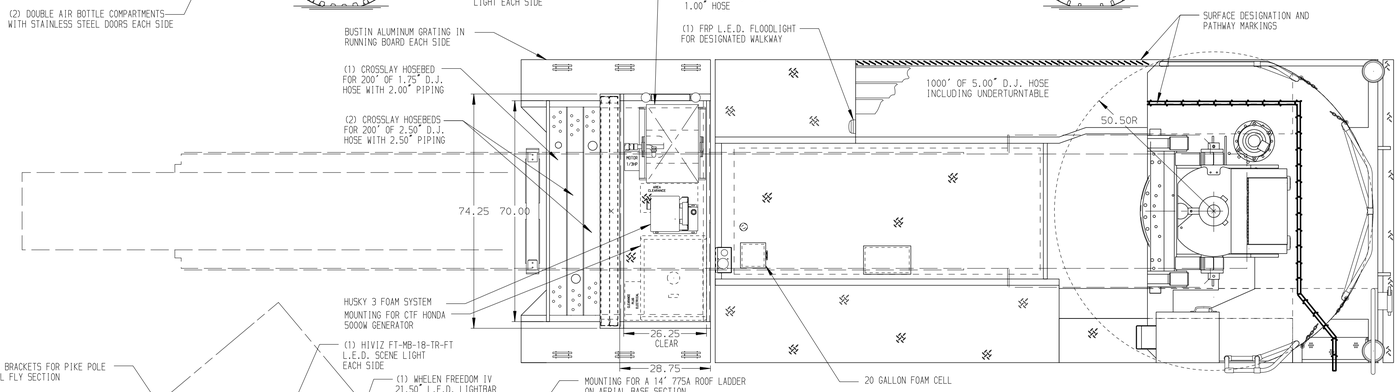

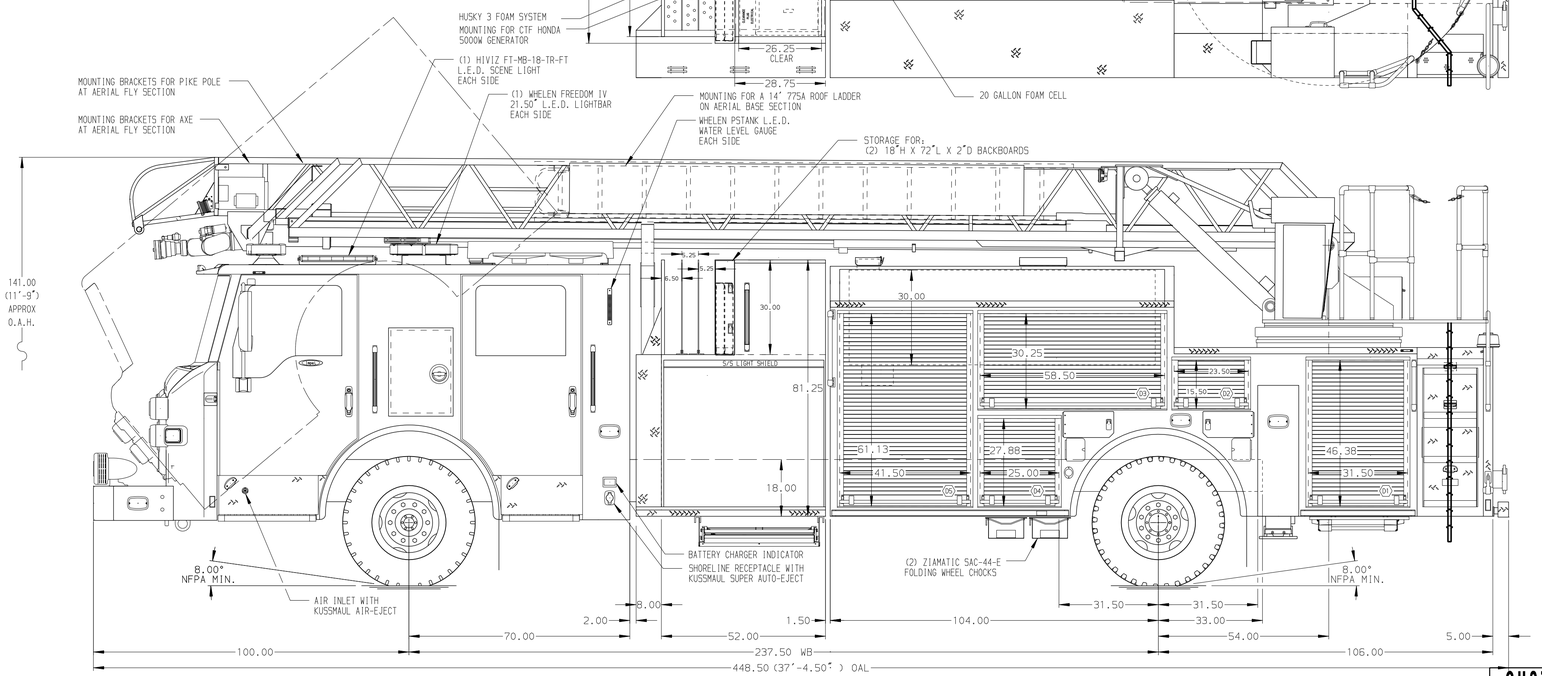

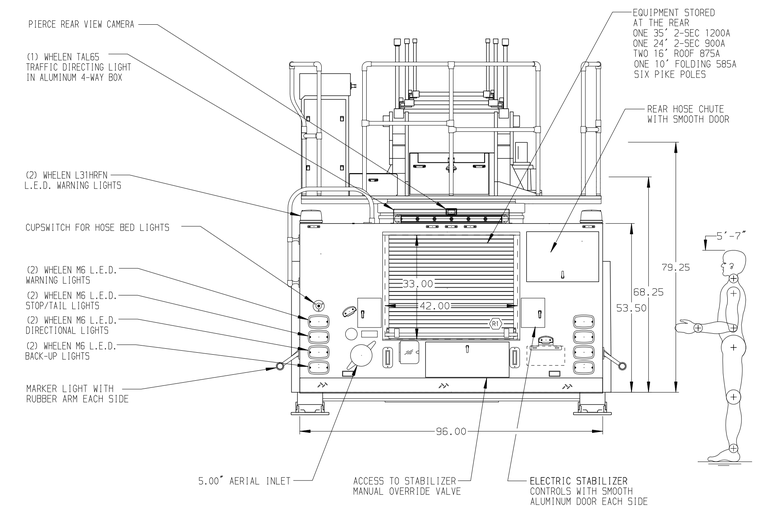

ALUMINUM BODY

SIDE ROLL AND FRONTAL IMPACT PROTECTION

NOTE

DIMENSIONS SHOWN ARE APPROXIMATE AND ARE SUBJECT TO MINOR DEVIATIONS AS MAY OCCUR OR BE NECESSARY IN CONSTRUCTION.
MINOR DETAILS NOT SHOWN.

1. BATTERY CHARGER LOCATED IN COMPARTMENT D5
2. ONE ADJUSTABLE FULL WIDTH/FULL DEPTH SHELF IN COMPARTMENT TBD
3. ONE FLOOR MOUNTED SLIDE-OUT TRAY IN COMPARTMENT D1,P1
4. SLIDE-OUT TOOL BOARD WITH PEGBOARD PATTERN IN COMPARTMENT TBD
5. ONE VERTICAL PARTITION IN COMPARTMENT TBD
6. CIRCUIT BREAKER PANEL IN COMPARTMENT D5
7. TRIDENT FOLDING STEPS ON AERIAL DEVICE
8. L.E.D. LIGHTING ON AERIAL LADDER SECTIONS
9. 2-WAY INTERCOM SYSTEM BETWEEN AERIAL TIP AND TURNTABLE
10. AERIAL PEDESTAL RAISED 3.00"
11. LIFTING EYE RESCUE ATTACHMENT AT AERIAL TIP
12. AIR HORN CONTROL AT TURNTABLE
13. ONE HANNAY ELECTRIC REWIND CORD REEL MODEL 1616-17-18 WITH 200' OF 10/3 CABLE (LOCATION TBD)
14. NO LIMITED RETRACTION

CUSTOMER APPROVAL

APPROVED BY: _____

DATE: _____

REV	DATE	BY	CH
▽	-	-	-

CHASSIS DATA

MAKE: PIERCE

MODEL: IMPEL

Pierce MANUFACTURING INC.

TITLE: 75 AERIAL LADDER & BODY ASSEMBLY
400 GALLON TANK 380 GAL WATER/20 GAL FOAM

FOR: EUSTIS FIRE DEPARTMENT
EUSTIS, FLORIDA

DWG NO.: 32770AD

JOB NO.	32770
SCALE	1:24
DATE	
DRAWN BY	MWA
07MAY18	
CHECKED BY	CRI
14MAY18	
SHEET SIZE	D
SHEET NO.	1 OF 1

View File Created 14-MAY-2018 12:41:49