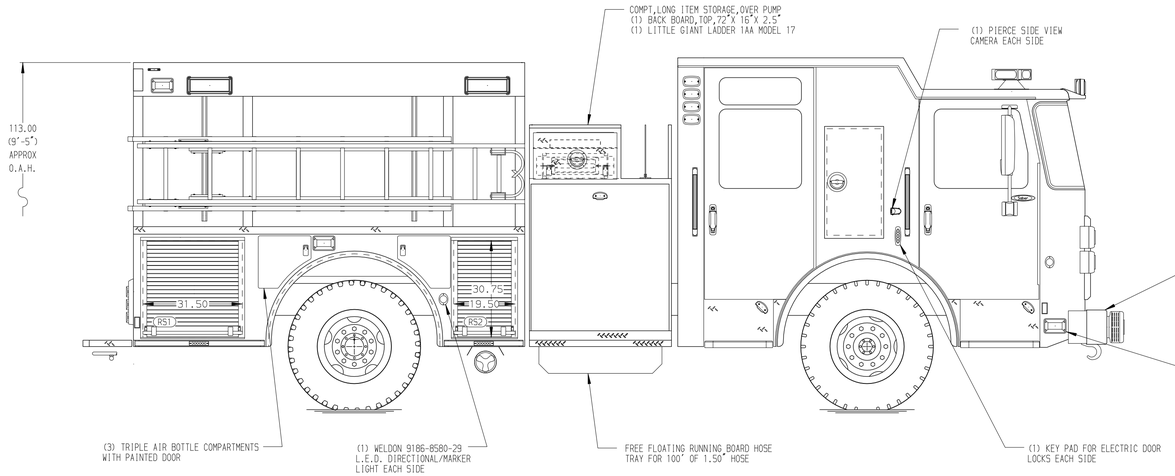

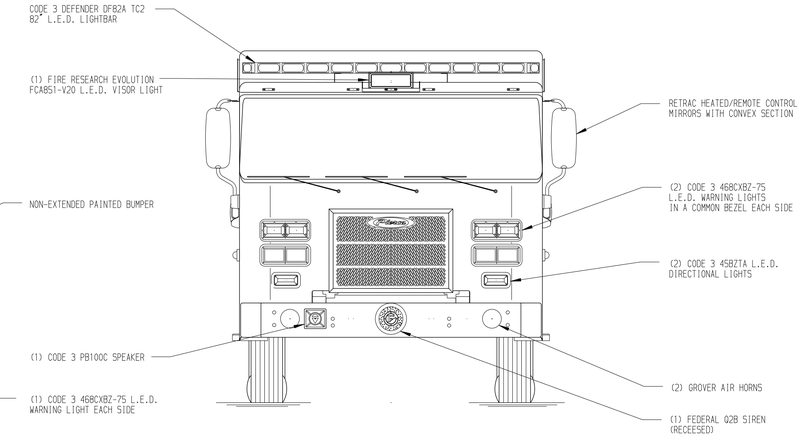

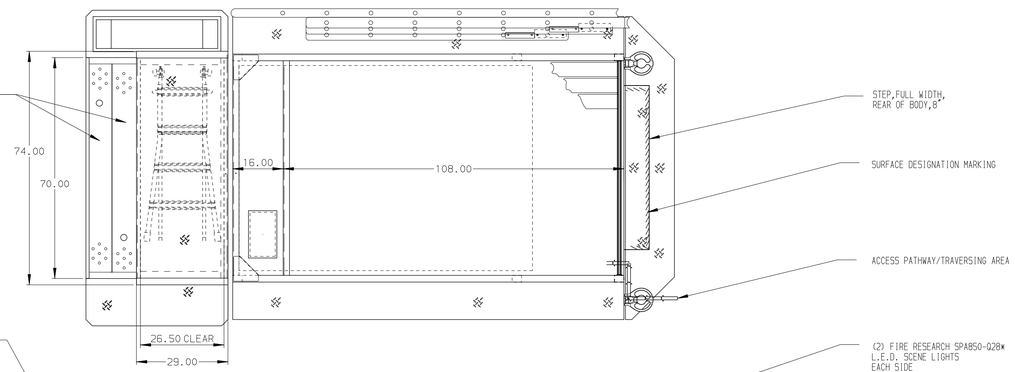

HOSEBED CAPACITIES

(1) 1000' OF 5.00" D.J. HOSE
(2) 1000' OF 3.00" D.J. HOSE

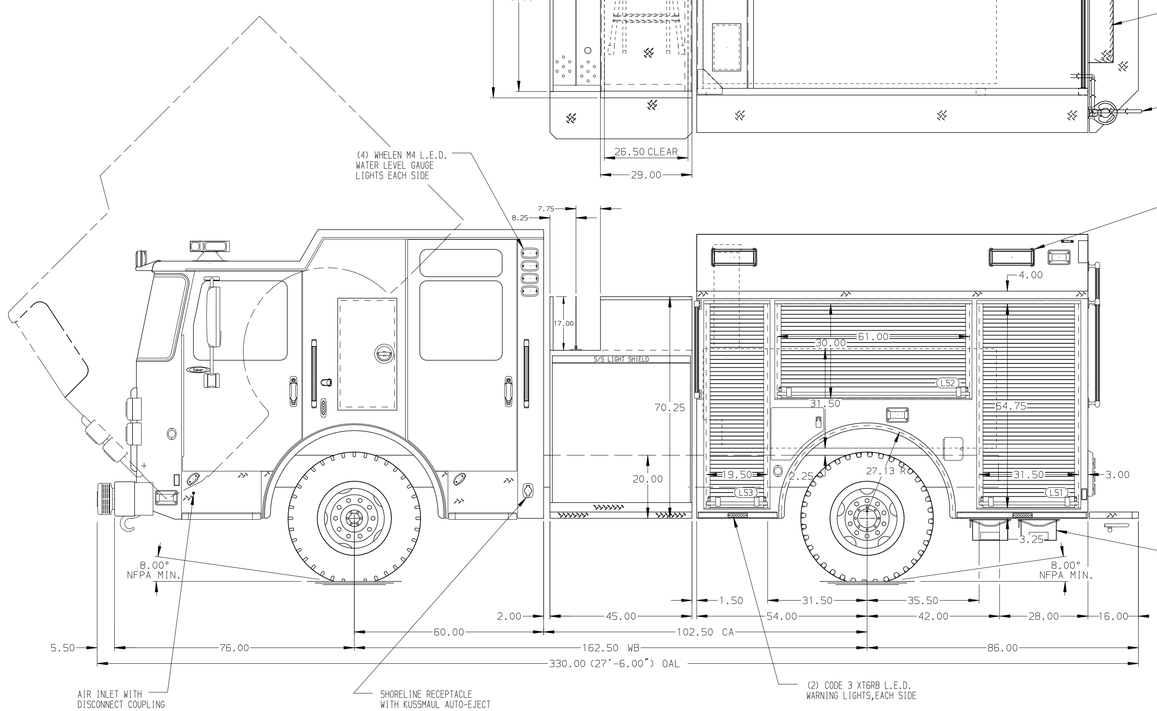

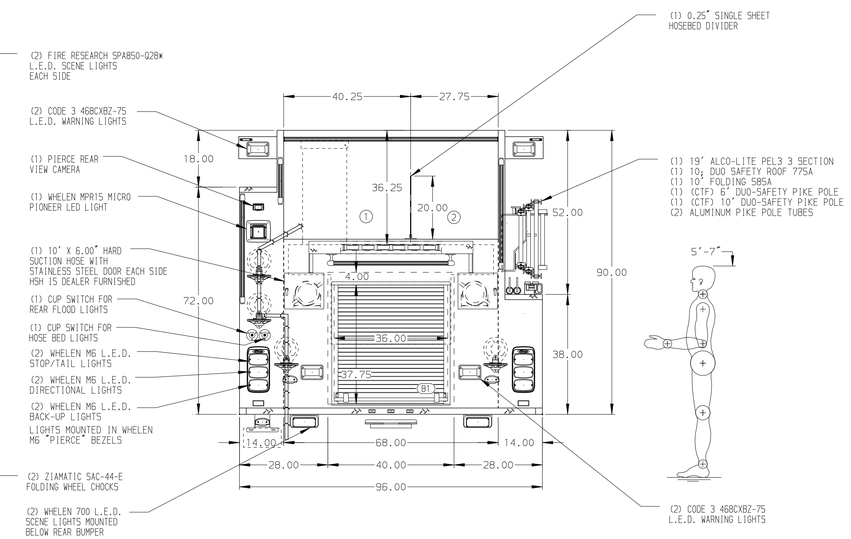

ALUMINUM BODY

NOTE

DIMENSIONS SHOWN ARE APPROXIMATE AND ARE SUBJECT TO MINOR DEVIATIONS AS MAY OCCUR OR BE NECESSARY IN CONSTRUCTION.
MINOR DETAILS NOT SHOWN.

REV	DATE	BY	CH
5	15NOV18	JLA	RWI
4	26OCT18	JLA	RWI
3	07SEP18	GVH	RWI

CHASSIS DATA — MAKE: PIERCE — MODEL: SABER FR

Pierce MANUFACTURING INC.

TITLE: 1250-D-500P, 124" BODY FULL HEIGHT FRONT & REAR LS LOW RS, (2)XLAYS, (2) H.S.H, LADDERS ON SIDE SHEET

FOR: FARMINGTON FIRE DEPARTMENT, FARMINGTON, MISSOURI

DWG NO.: 32840AD

JOB NO.	SCALE	DRAWN BY	CHECKED BY	SHEET SIZE	SHEET NO.
32840	1:24	MMF	NPE	D	1 OF 1

DATE: 27AUG18 — 30AUG18

View File Created 16-NOV-2018 10:42:54