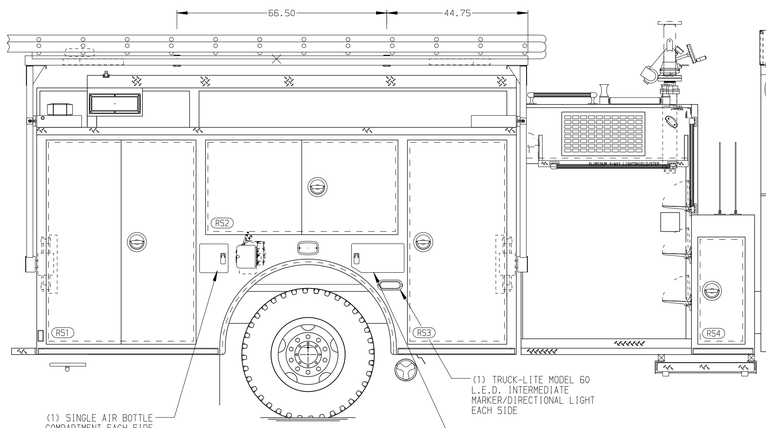

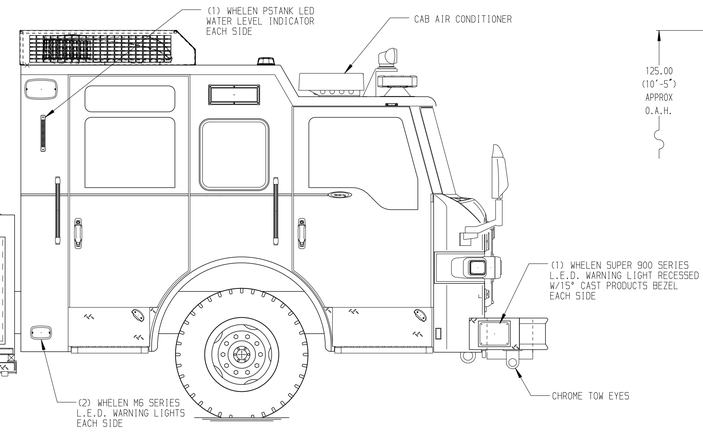

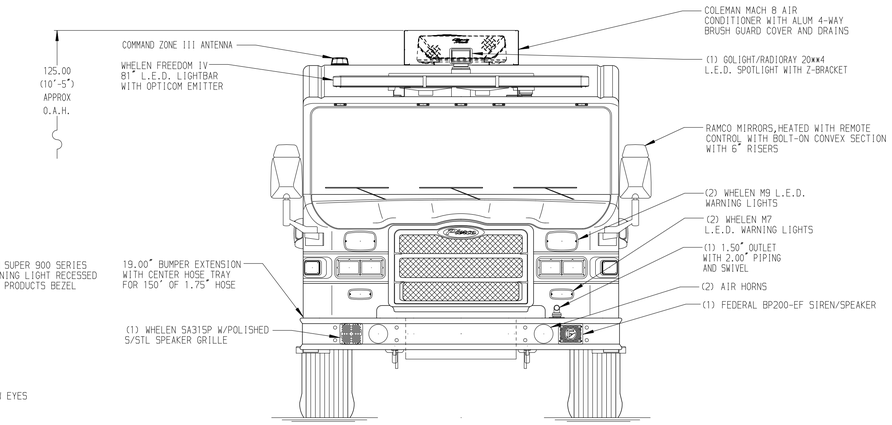

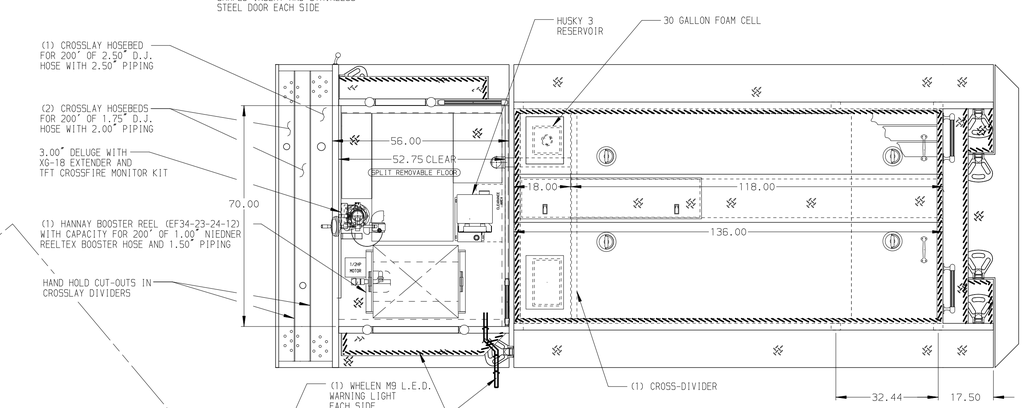

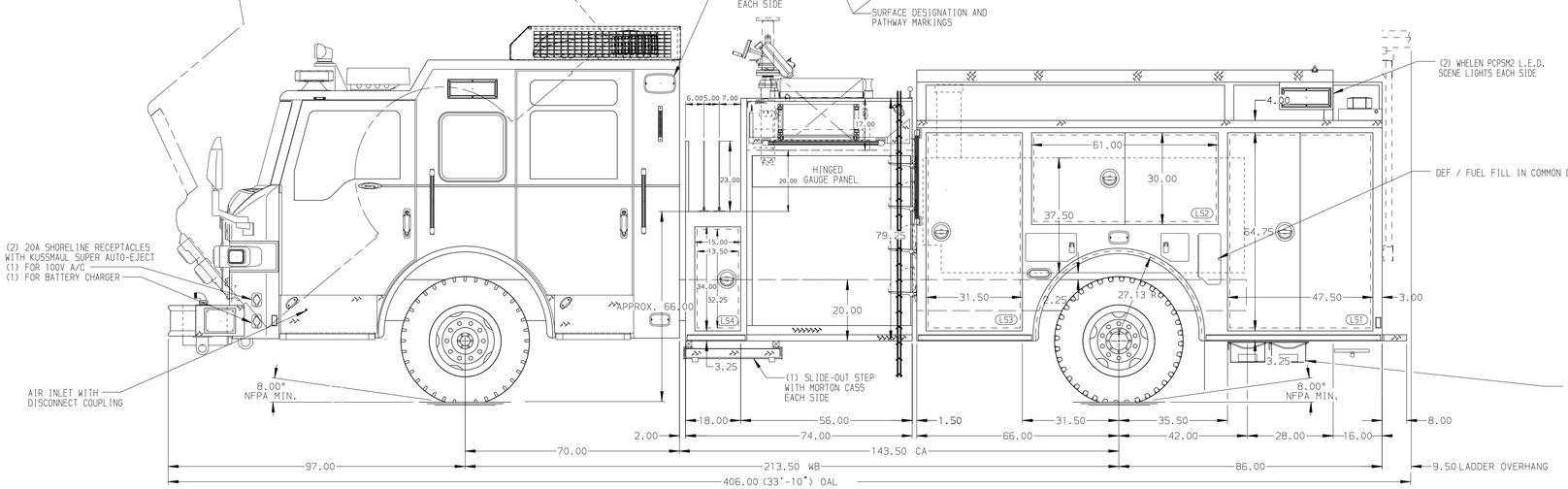

HOSEBED CAPACITIES

1. 1000' OF 5.00" HOSE
2. 300' OF 3.00" HOSE
3. OPEN

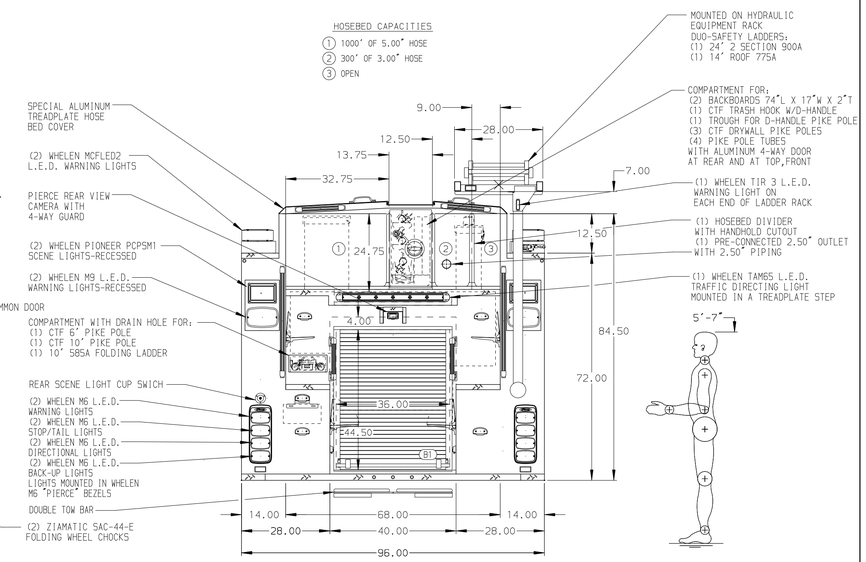

GALVANNEAL

SIDE ROLL AND FRONTAL IMPACT PROTECTION

NOTE

DIMENSIONS SHOWN ARE APPROXIMATE AND ARE SUBJECT TO MINOR DEVIATIONS AS MAY OCCUR OR BE NECESSARY IN CONSTRUCTION.
MINOR DETAILS NOT SHOWN.

1. KUSSMAUL BATTERY CHARGER LOCATED IN COMPARTMENT LS3
2. BATTERY CHARGE INDICATOR LOCATED ON D.S. SEAT WITH BRACKET
3. REVERSED HINGED DOOR ON COMPARTMENT LS3
4. S/STL SCUFFPLATE AT CAB DOOR JAMBS
5. S/STL PROTECTIVE GUARD FOR ROLL-UP DOOR IN COMPARTMENT B1
6. ONE FULL WIDTH/DEPTH PAINTED ADJUSTABLE SHELF IN COMPARTMENT RS3 & B1; TWO IN LS1; THREE IN LS3
7. ONE FLOOR MOUNTED SLIDE-OUT TRAY IN COMPARTMENT LS1
8. SMOOTH "DA" ALUMINUM ON COMPARTMENT FLOOR IN LS1, LS3, RS1 & RS3
9. DRAIN HOLE WITH SPLASH GUARD LOCATED IN EACH PIKE POLE COMPARTMENT
10. ALL BODY COMPARTMENTS WITH LOUVERS SHALL HAVE A REMOVABLE DUSH FILTER
11. LOUVERS IN COMPARTMENT B1
12. PARTITION BETWEEN COMPARTMENTS LS1/B1 AND RS1/B1
13. TWO ZICO AIR BOTTLE HOLDERS W/TRACKS MOUNTED IN COMPARTMENTS LS2 & RS2

REV	DATE	BY	CH
1	18OCT18	LME	MSA
2	21SEP18	LME	NPA

CHASSIS DATA
MAKE: PIERCE
MODEL: VELOCITY FR

Pierce MANUFACTURING INC.

TITLE: 1500-D-750P W/30 FOAM, 152 BODY FULL HEIGHT FRONT & REAR, FDLER, HYD LADDER RACK, HUSKY 3
FOR: SUPERSTITION FIRE & MEDICAL DISTRICT APACHE JUNCTION, ARIZONA
DWG NO.: 32973AD

JOB NO.	32973
SCALE	1:24
DATE	
DRAWN BY	LME 14SEP18
CHECKED BY	NPA 18SEP18
SHEET SIZE	D
SHEET NO.	1 OF 1

View File Created 19-OCT-2018 11:49:45