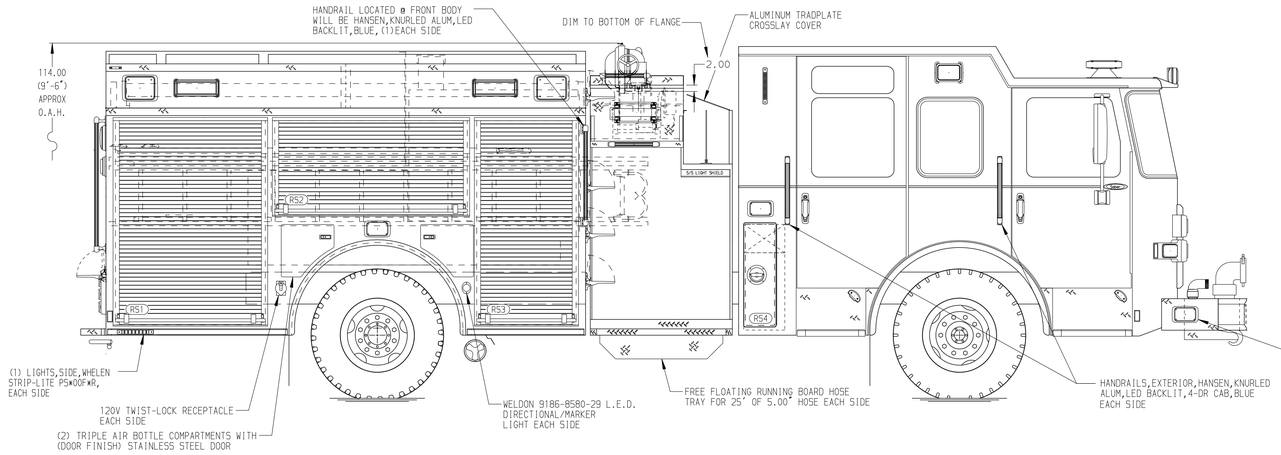

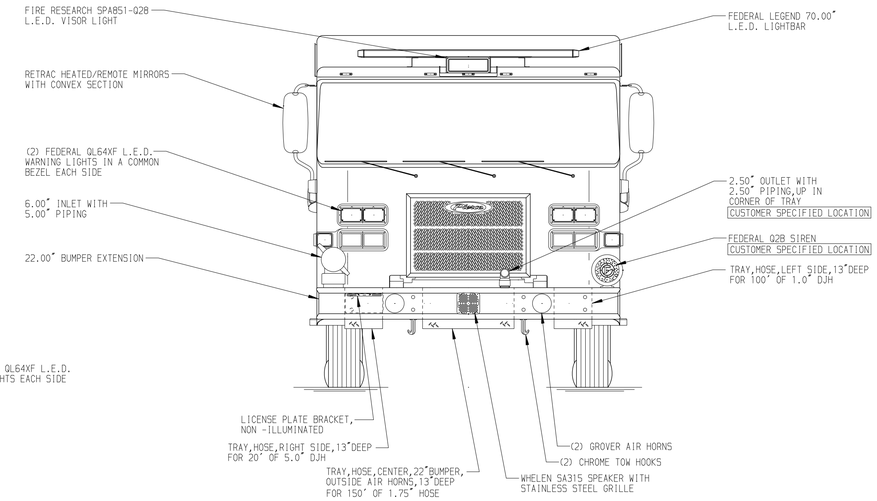

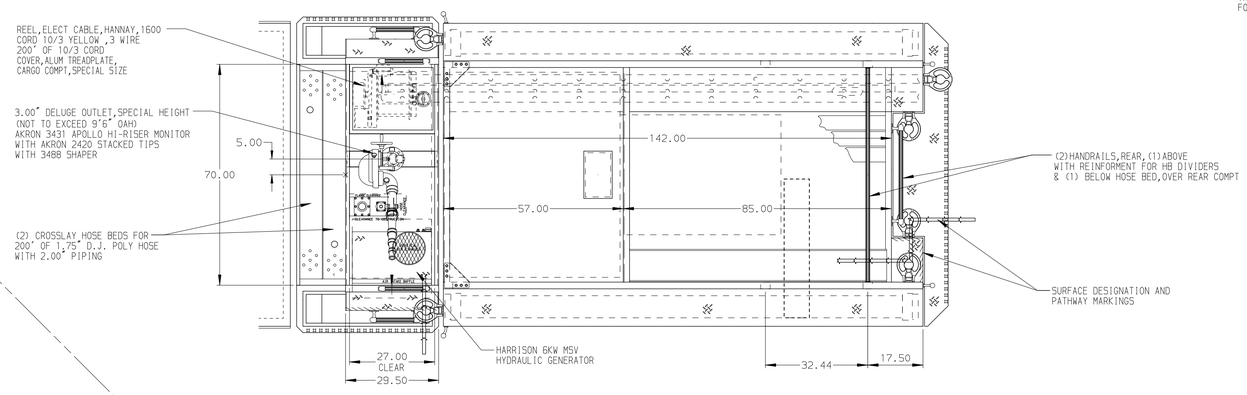

HOSEBED CAPACITIES

1. 200' OF 2.50" D.J. POLY HOSE
2. 1000' OF 5.00" D.J. POLY HOSE
3. 500' OF 3.00" D.J. POLY HOSE
4. 200' OF 2.50" D.J. POLY HOSE

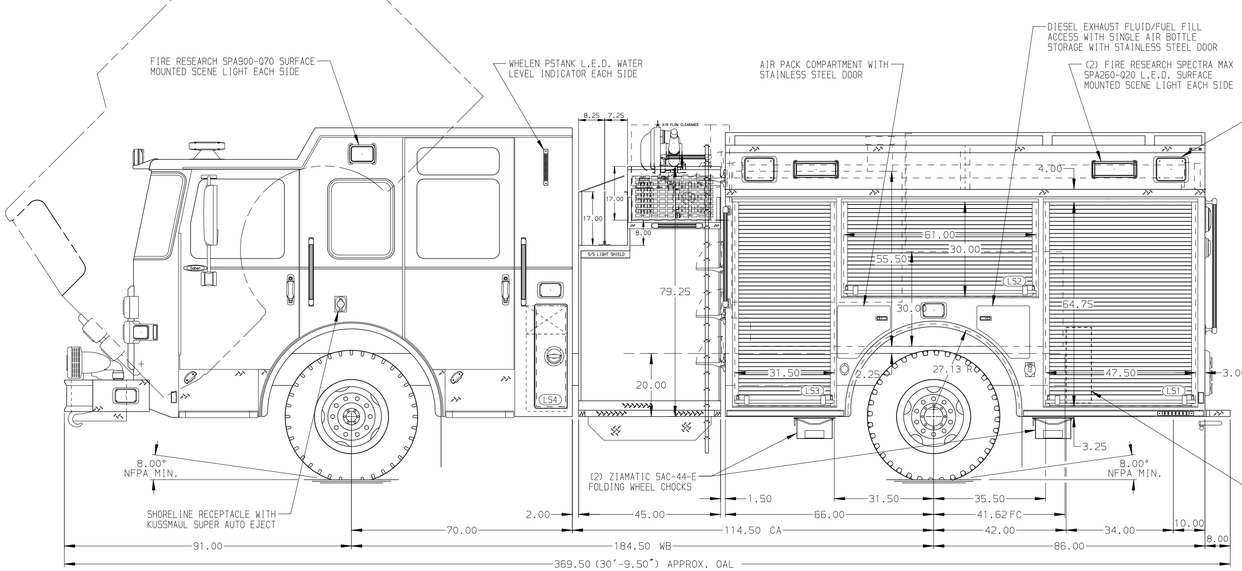

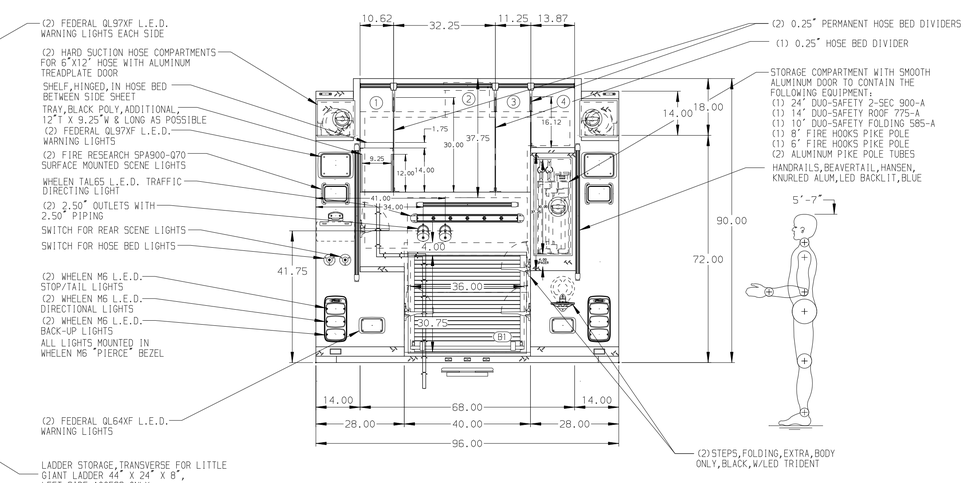

ALUMINUM BODY

MAXIMUM O.A.H. 114.00"

NOTE

DIMENSIONS SHOWN ARE APPROXIMATE AND ARE SUBJECT TO MINOR DEVIATIONS AS MAY OCCUR OR BE NECESSARY IN CONSTRUCTION.
MINOR DETAILS NOT SHOWN.

REV	DATE	BY	CH
3	20DEC18	JLA	GSC
2	12NOV18	JAF	GSC
1	21SEP18	BST	NPA

CHASSIS DATA — MAKE: PIERCE — MODEL: SABER FR

Pierce MANUFACTURING INC.

TITLE: 2000-D-750P,152" PUMPER BODY,DELUGE,GENERATOR LADDERS BETWEEN TANK AND BODY,(2) CROSSLAYS

FOR: BOROUGH OF MANVILLE, MANVILLE, NJ

DWG NO.: 33038AD

JOB NO.	33038
SCALE	1:24
DATE	
DRAWN BY	BST 11SEP18
CHECKED BY	AJA 11SEP18
SHEET SIZE	D
SHEET NO.	1 OF 1

View File Created 21-DEC-2018 13:58:05