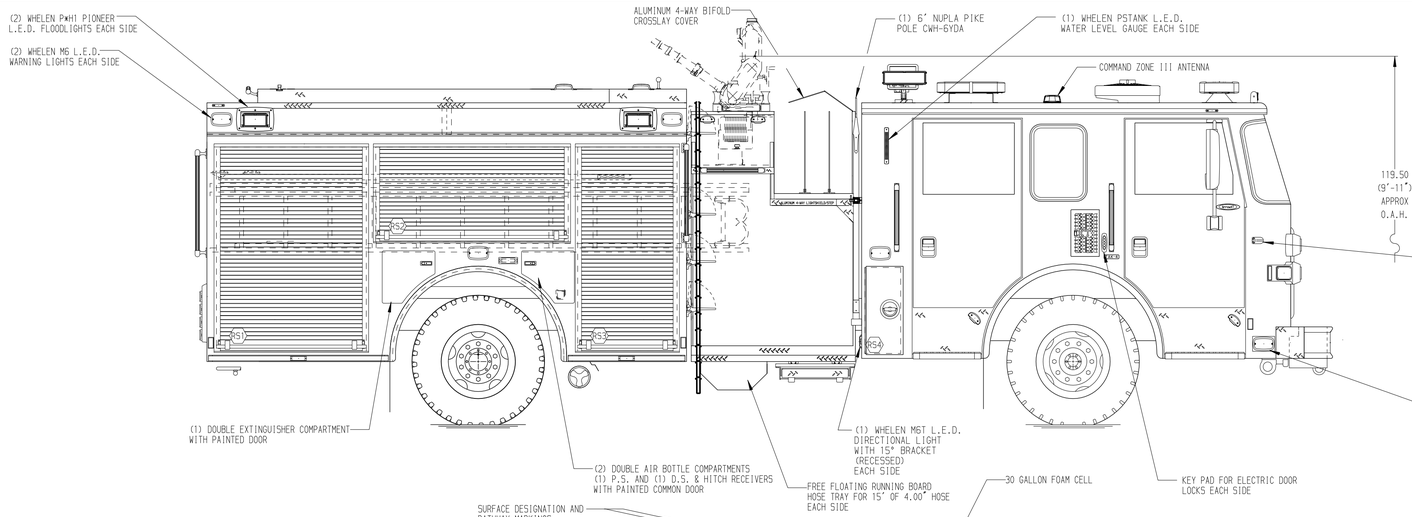

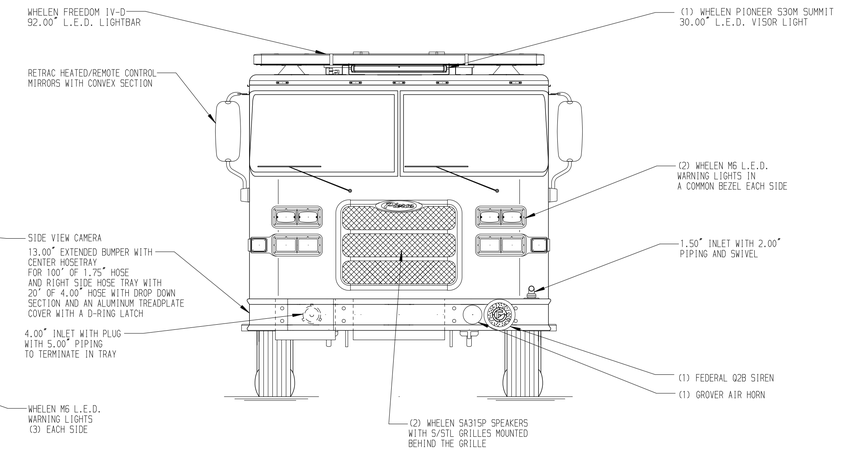

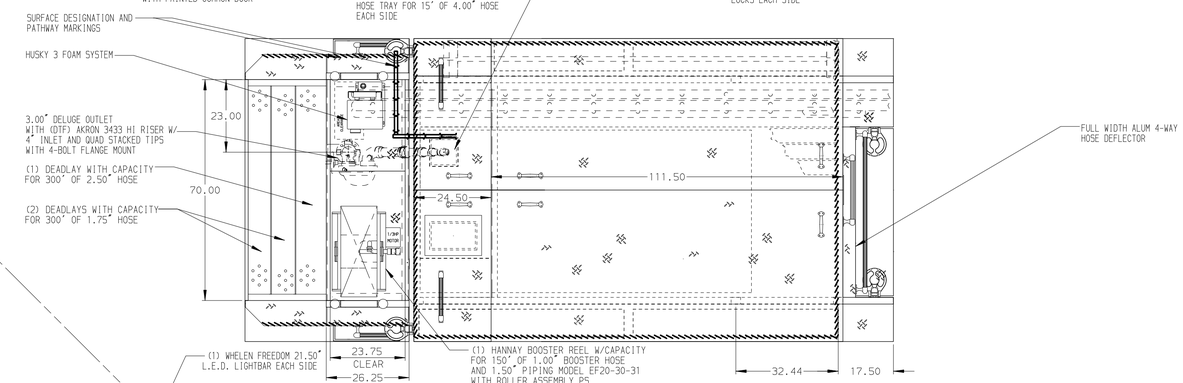

HOSEBED CAPACITIES

1. 800' OF 4.00" D.J. POLY HOSE
2. 800' OF 2.50" D.J. POLY HOSE
3. 100' OF 1.50" D.J. POLY HOSE

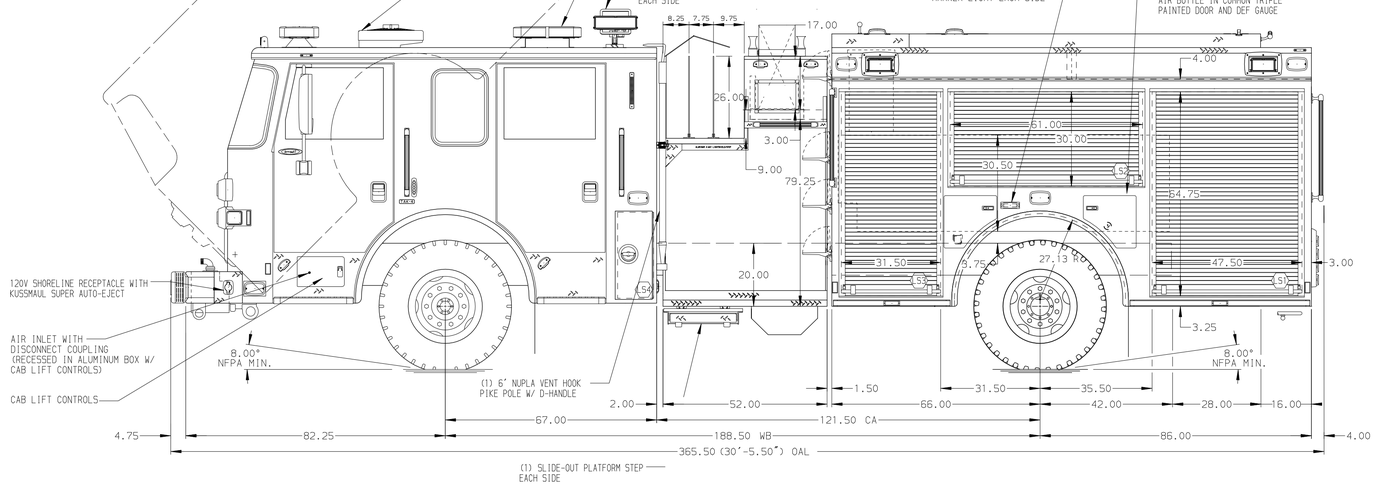

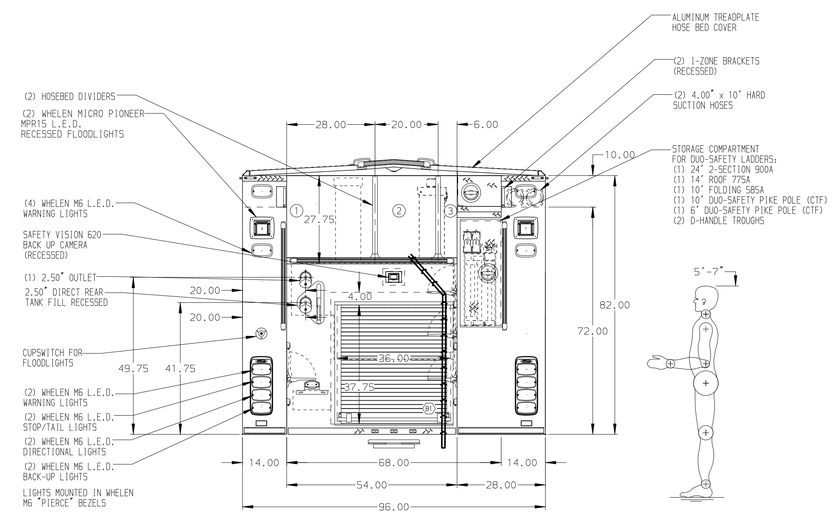

ALUMINUM BODY

SIDE ROLL AND FRONTAL IMPACT PROTECTION

NOTE

DIMENSIONS SHOWN ARE APPROXIMATE AND ARE SUBJECT TO MINOR DEVIATIONS AS MAY OCCUR OR BE NECESSARY IN CONSTRUCTION.
MINOR DETAILS NOT SHOWN.

1. AIR OUTLET WITH SHUT-OFF VALVE LOCATED ON DRIVER'S SIDE PUMP PANEL
2. BATTERY CHARGER LOCATED BEHIND DRIVER'S SEAT
3. BATTERY CHARGE INDICATOR LOCATED NEAR DRIVER'S SEAT RISER WITH BRACKET
4. DRIP PAN GUARD FOR ROLL-UP DOOR LOCATED IN COMPARTMENT LS1, LS2, LS3, RS1, RS2, RS3 & B1
5. ONE ADJUSTBALE FULL WIDTH/DEPTH SHELF IN COMPARTMENT LS3, RS2, RS3, B1, TWO IN LS1, THREE IN RS1
6. ONE FLOOR MOUNTED SLIDE-OUT TRAY IN COMPARTMENT LS1 & B1
7. ONE SWING-OUT ALUMINUM TOOL BOARD IN COMPARTMENT LS2
8. ALUMINUM PEGBOARD W/TRACK ON BACK WALL OF COMPARTMENT LS3
9. CTECH DRAWER ASSEMBLY IN COMPARTMENT LS3
10. ZIAMATIC SCBA HOLDER BRACKET LOCATED LS3 & RS3
11. ONE COAT HOOK MOUNTED IN COMPARTMENT RS3
12. PARTITION BETWEEN COMPARTMENTS LS1/B1 AND RS1/B1
13. HORIZONTAL EQUIPMENT MOUNTING TRACKS IN COMPARTMENT RS3
14. ONE 120V NEMA DUPLEX RECEPTACLE IN RS1 AND B1

REV	DATE	BY	CH
7	10DEC18	LST	SHA
6	15NOV18	LST	JJR

CHASSIS DATA
MAKE: PIERCE
MODEL: ARROW XT

Pierce MANUFACTURING INC.

TITLE: 1500-D-500P,W/30 G FOAM CELL, 152" D.S. FH P.S. FHFD (3)DEADLAYS,LADDERS BETWEEN TANK AND S.SHEET, DELUGE
FOR: GLENDALE FIRE DEPARTMENT GLENDALE, CALIFORNIA
DWG NO.: 33083AD

JOB NO.	33083
SCALE	1:24
DATE	
DRAWN BY	AMI 27SEP18
CHECKED BY	SMA 27SEP18
SHEET SIZE	D
SHEET NO.	1 OF 1

View File Created 11-DEC-2018 15:03:14