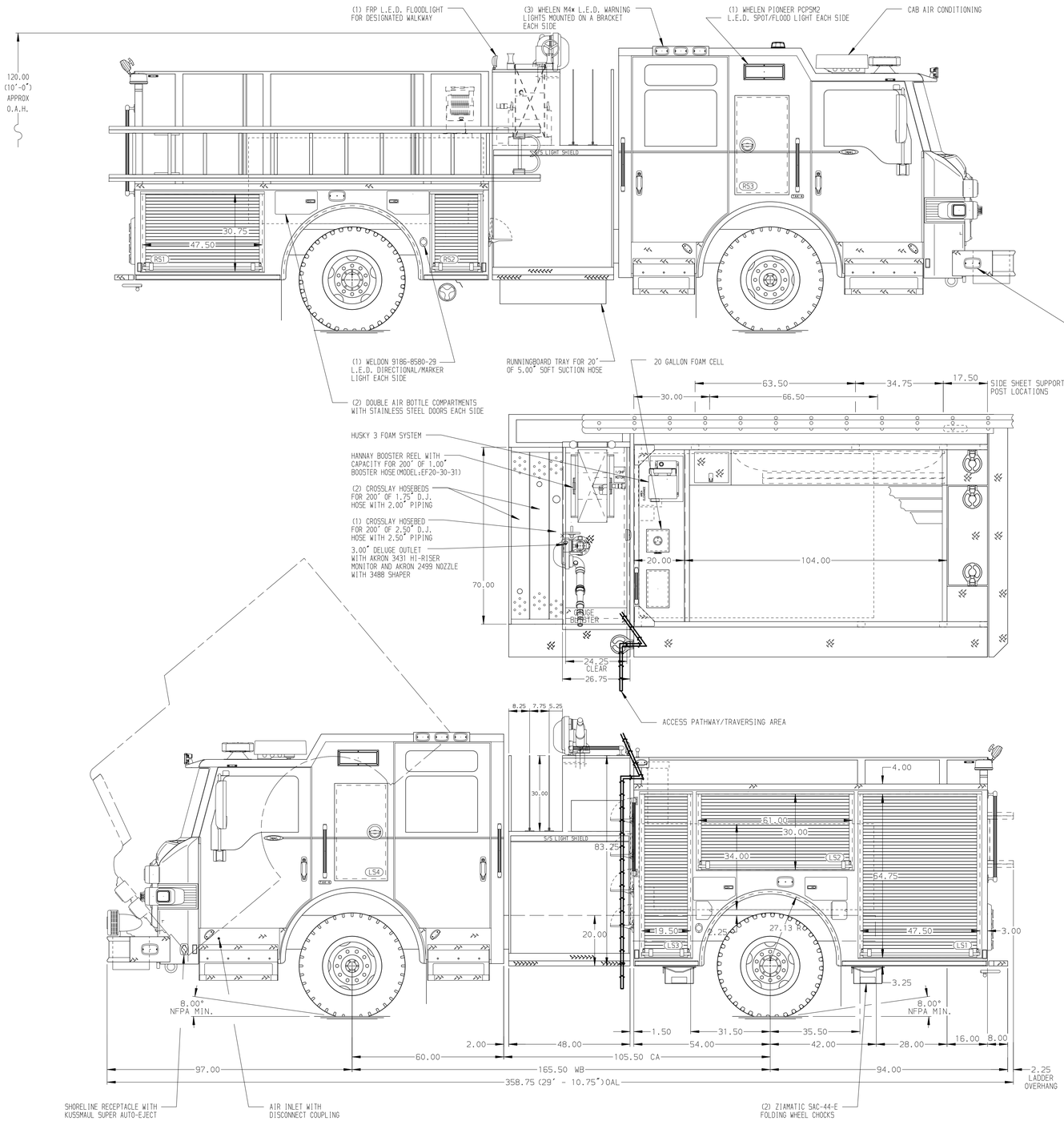

ALUMINUM BODY

SIDE ROLL AND FRONTAL IMPACT PROTECTION

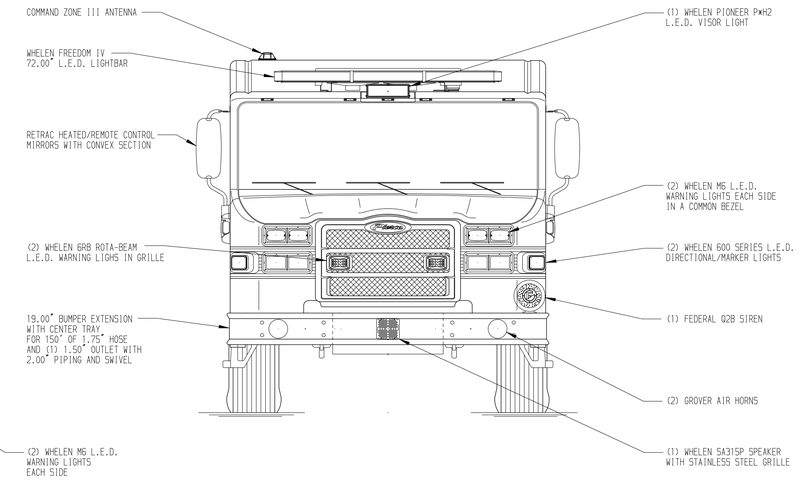

HOSEBED CAPACITIES

1 - 300' OF 2.50" HOSE
2 - 1000' OF 5.00" HOSE

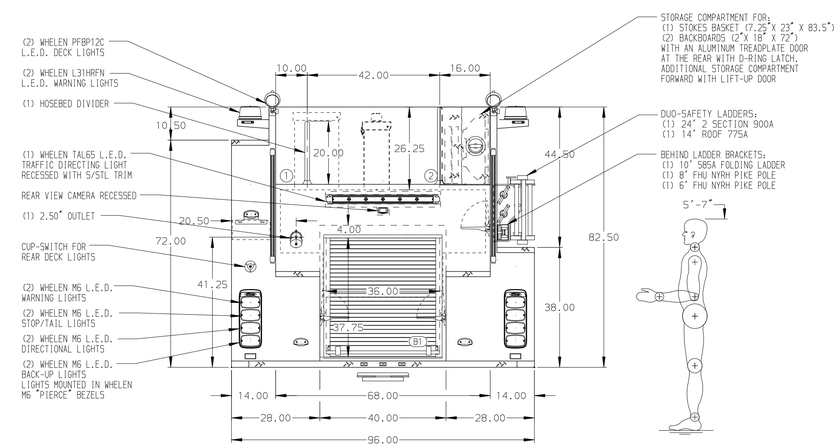

NOTE

DIMENSIONS SHOWN ARE APPROXIMATE AND ARE SUBJECT TO MINOR DEVIATIONS AS MAY OCCUR OR BE NECESSARY IN CONSTRUCTION.
MINOR DETAILS NOT SHOWN.

1. BATTERY CHARGER LOCATED IN CAB
2. BATTERY CHARGE INDICATOR LOCATED NEAR DRIVER'S SEAT RISER WITH BRACKET
3. ONE ADJUSTABLE FULL WIDTH/DEPTH SHELF IN COMPARTMENT LS1 & B1, TWO IN LS3
4. ONE SWING-OUT TOOLBOARD WITH PEGBOARD IN COMPARTMENT LS2

REV	DATE	BY	CH
V	29NOV18	AMI	PJP
B	01NOV18	AMI	PJP
V	16OCT18	AMI	CCA

CHASSIS DATA
MAKE: PIERCE
MODEL: IMPEL FR

Pierce MANUFACTURING INC.

TITLE: 1500-D-600P W/20G FOAM CELL, 140" SHORT PUMPER BODY (3)XLAYS, LADDERS ON PS SIDE SHEET, BOOSTER REEL

FOR: JENKS FIRE DEPARTMENT, JENKS, OKLAHOMA

DWG NO.: 33119AD

JOB NO.	33119
SCALE	1:24
DATE	
DRAWN BY	AMI 08OCT18
CHECKED BY	CCR 08OCT18
SHEET SIZE	D
SHEET NO.	1 OF 1

View File Created 30-NOV-2018 10:23:25