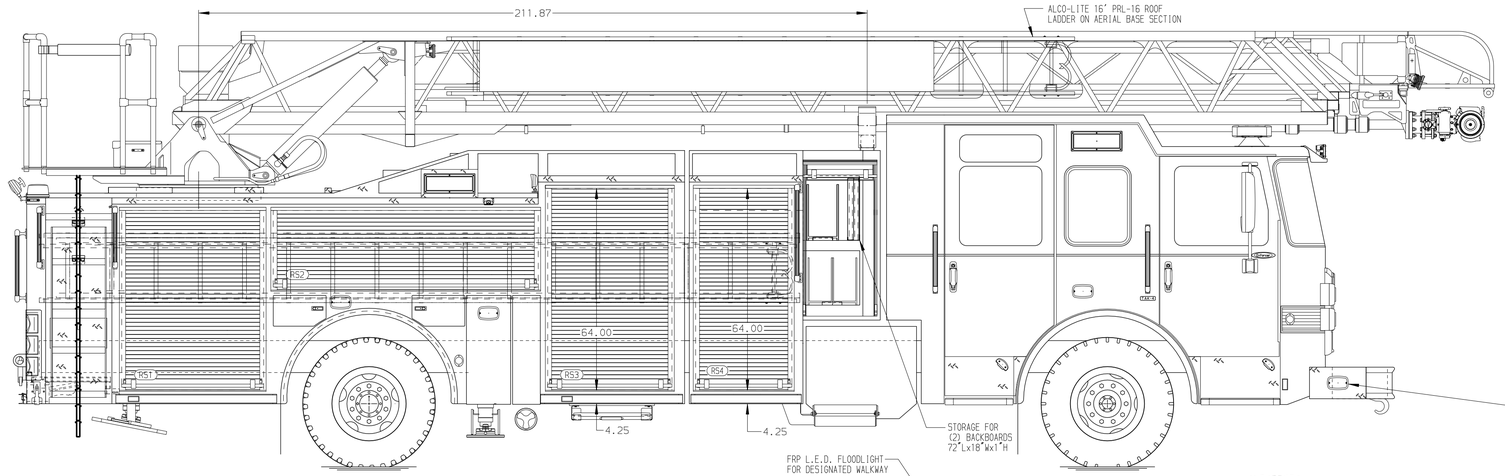

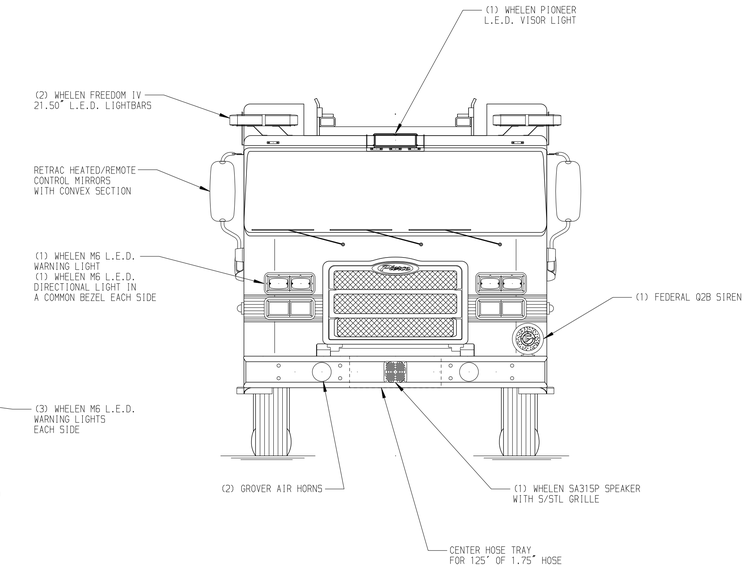

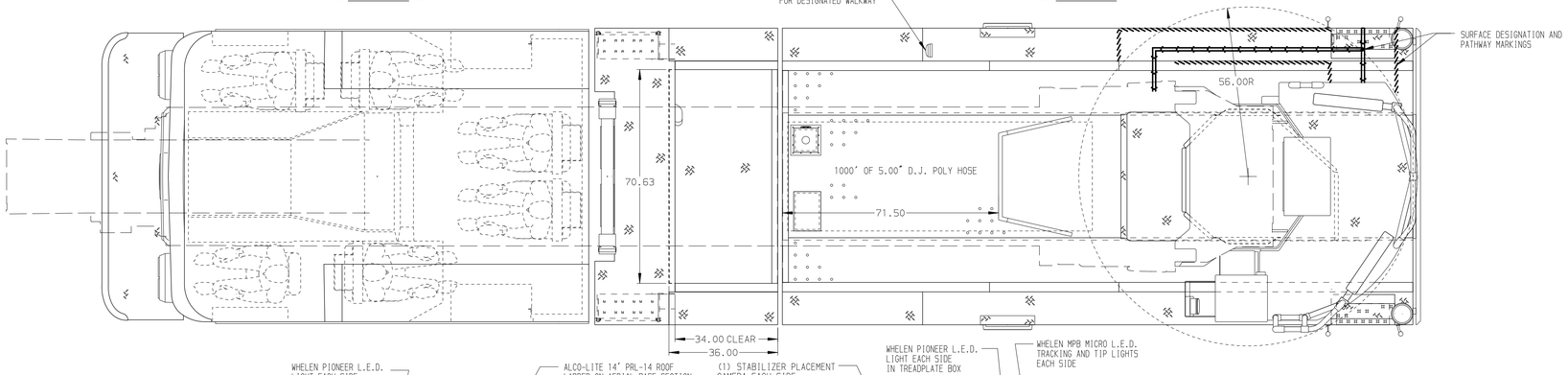

BODY	WATER TANK
107' ASL Aluminum Body PUC	500 Gallon Poly Water Tank
COMPT,DRIVER SIDE FRONT	Foam System
Full Height Rollup Forward	Plumbing for Future Husky Foam System
COMPT,DRIVER SIDE REAR	Foam Cell
Full Height Rollup Rearward	20 Gallon Foam Cell, Non-Reduced Water, PUC
COMPT,PASSENGER SIDE FRONT	
Full Height Rollup Forward	
COMPT,PASSENGER SIDE REAR	
Full Height Rollup Rearward	

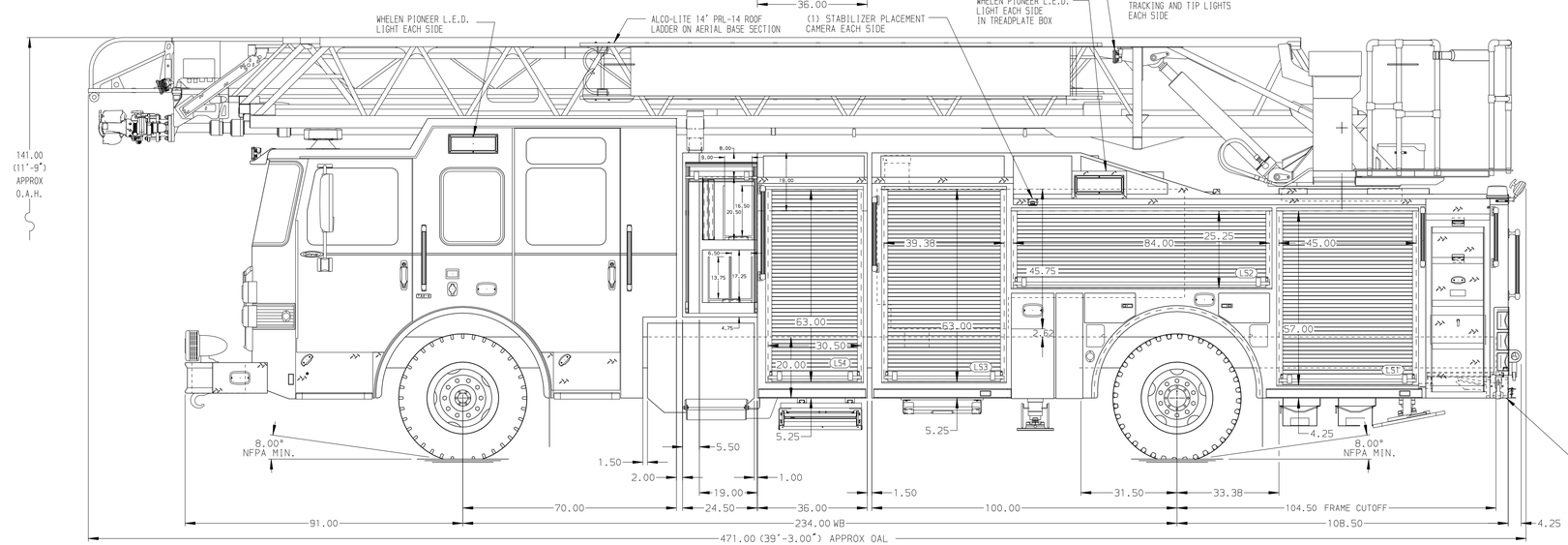

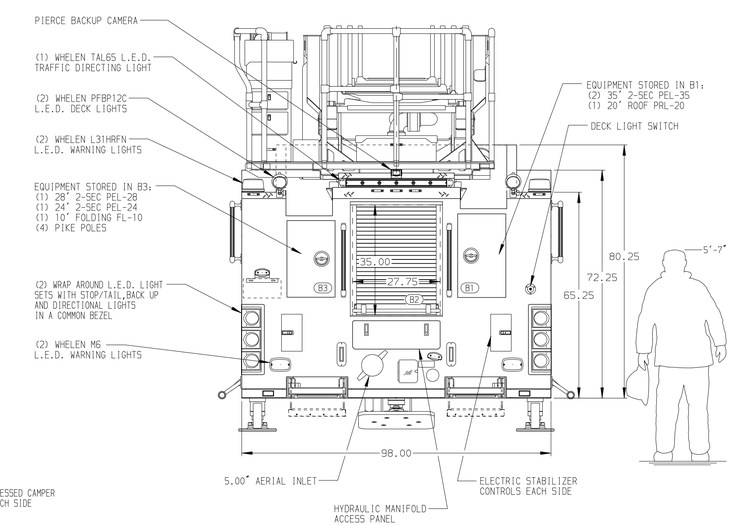

CHASSIS	CAB	AXLE,FRONT,CUSTOM	TRANSMISSION	PUMPHOUSE	CROSSLAYS,1.50"	SPEEDLAYS	SAFETY
Enforcer Chassis, PUC	7000 Enforcer Cab, PUC	22,800 Lb TAK-4 Axle	Allison 5th Gen, 3000 EVS P	Control Zone, PAL/PAP PUC	(2) 1.50",Full Width Trays,200'	Speedlays Not Required	Side Roll and Frontal Impact Protection
ENGINE	BUMPER	AXLE,REAR		PUMP	CROSSLAYS,2.50"	GENERATOR	
450 HP Cummins L9 Engine	22" Extended Stainless Steel	33,500 Lb Meritor Axle		1500 GPM Pierce PUC	(1) 2.50",Full Width Tray,200'	Generator Not Required	

CUSTOMER APPROVAL

APPROVED BY: _____

DATE: _____

Pierce MANUFACTURING INC.

NOTE

DIMENSIONS SHOWN ARE APPROXIMATE AND ARE SUBJECT TO MINOR DEVIATIONS AS MAY OCCUR OR BE NECESSARY IN CONSTRUCTION.
MINOR DETAILS NOT SHOWN.

1. ONE 1.50 OUTLET WITH 2.00 PIPING AND SWIVEL LOCATED IN CENTER BUMPER TRAY
2. SHORELINE RECEPTACLE WITH KUSSMAUL SUPER AUTO-EJECT LOCATED ON DRIVER SIDE OF THE CAB
3. AIR INLET WITH DISCONNECT COUPLING IN THE DRIVER SIDE STEPWELL
4. BATTERY CHARGER LOCATED BEHIND DRIVER'S SEAT
5. BATTERY CHARGE INDICATOR LOCATED ON DRIVER SIDE OF THE CAB
6. SIX ADJUSTABLE SHELVES IN COMPARTMENTS PER SHOP ORDER
7. FOUR FLOOR MOUNTED SLIDE-OUT TRAYS IN COMPARTMENTS PER SHOP ORDER
8. PLUMBING FOR FUTURE HUSKY 3/12 FOAM SYSTEM PER SHOP ORDER
9. 1500 GPM HIGH FLOW WATERWAY
10. NON-RAISED AERIAL PEDESTAL
11. NO LIMITED RETRACTION

REV	DATE	BY	CH
-	-	-	-

CHASSIS DATA — MAKE: PIERCE — MODEL: ENFORCER

TITLE: 107' ASCENDANT AERIAL LADDER AND BODY ASSEMBLY
-

FOR: PIERCE FIELD UNIT
APPLETON, WISCONSIN

DWG NO.: 33130AD

JOB NO.	33130
SCALE 1:24	DATE
DRAWN BY LWE	190CT18
CHECKED BY THS	190CT18
SHEET SIZE D	SHEET NO. 1 OF 1

View File Created 22-OCT-2018 07:05:52