PUMPER

BODY
Medium Aluminum 2nd Gen Pumper

CHASSIS
Enforcer Chassis

CHASSIS

AXLE, FRONT, CUSTOM
19,500 lb TAK-4 Axle

AXLE, REAR
27,000 lb Dana Axle

ENGINE
450 HP Cummins L9 Engine

TRANSMISSION
Allison 5th Gen, 3000 EVS P

BUMPER
19" Extended Painted Steel

CAB
7010 Enforcer Cab

BODY

WATER TANK
980 Gallon Poly Water Tank

COMPT, PUMPER, REAR
51.25" FF, 25.88" Deep Flush Rollup Rear Compt

COMPT, PUMPER, LEFT SIDE
152" Rollup Full Height Front & Rear FDLER

COMPT, PUMPER, RIGHT SIDE
152" Rollup Full Height Front & Rear FDLER

FIRE SUPPRESSION

PUMPHOUSE
45" Control Zone Side Mount

PUMP
1500 GPM Waterous CSU

CROSSLAYS, 1.50"
(2) 1.50" Standard Capacity

CROSSLAYS, 2.50"
2.50" Crosslay Not Required

SPEEDLAYS
Speedlays Not Required

GENERATOR
Generator Not Required

Foam System
Husky 12 Single Agent Foam System

Foam Cell
20 Gallon Foam Cell, Reduced Water

Side Roll and Frontal Impact Protection

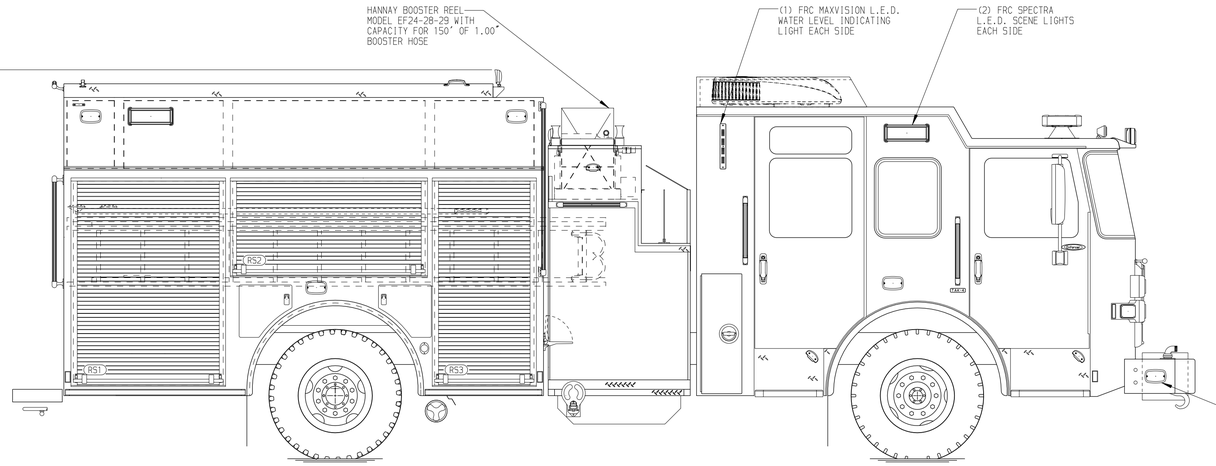

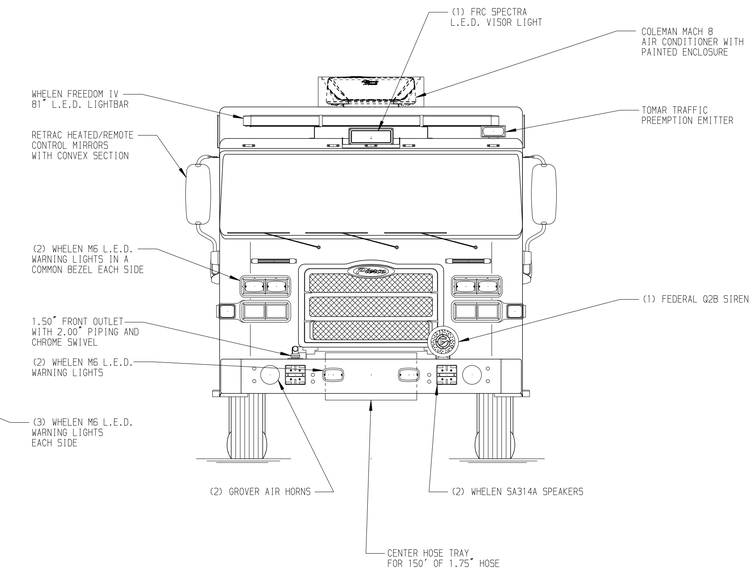

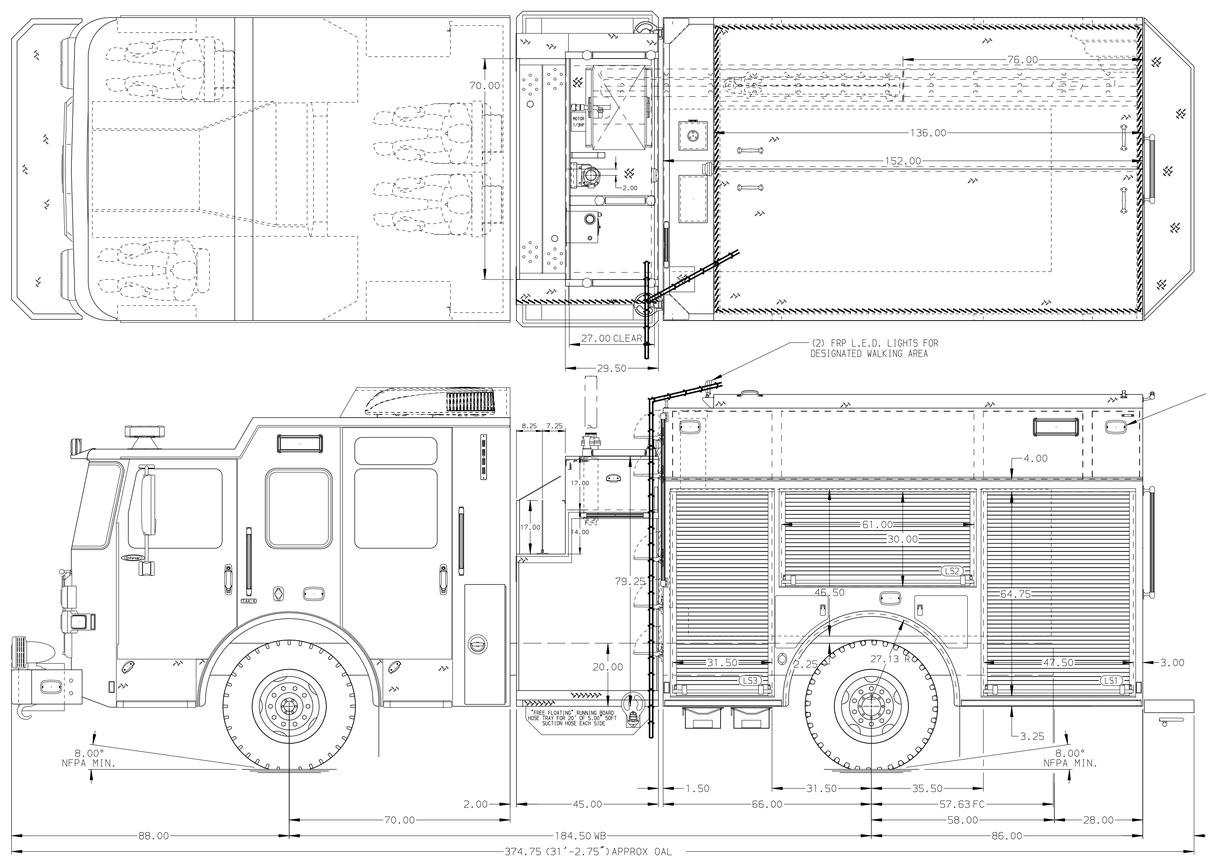

HOSEBED CAPACITY

BED 1
1000' OF 5.00" D.J. POLY HOSE

BED 2
300' OF 3.00" D.J. POLY HOSE

BED 3
300' OF 3.00" D.J. POLY HOSE

BED 4
HOSE PACKS

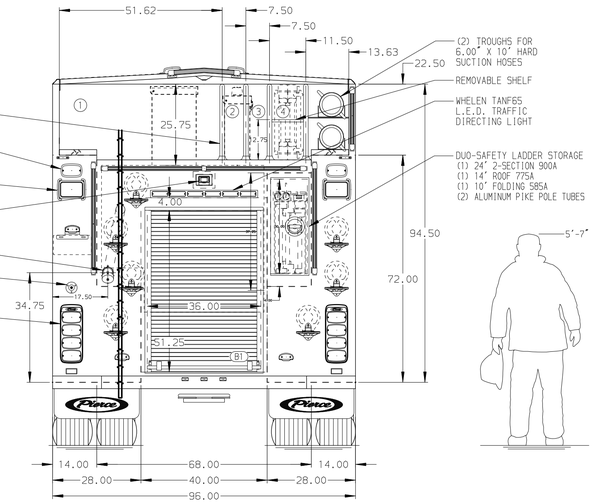

NOTE

DIMENSIONS SHOWN ARE APPROXIMATE AND ARE SUBJECT TO MINOR DEVIATIONS AS MAY OCCUR OR BE NECESSARY IN CONSTRUCTION.
MINOR DETAILS NOT SHOWN.

1. SHORELINE RECEPTACLE WITH KUSSMAUL SUPER AUTO-EJECT LOCATED ON DRIVER SIDE OF THE CAB
2. AIR INLET WITH DISCONNECT COUPLING LOCATED ON DS PUMP PANEL
3. BATTERY CHARGER LOCATED IN COMPARTMENT D3
4. BATTERY CHARGE INDICATOR LOCATED ON THE DRIVER SIDE SEAT RISER
5. SEVEN ADJUSTABLE SHELVES IN COMPARTMENTS PER SHOP ORDER
6. THREE FLOOR MOUNTED SLIDE-OUT TRAYS IN COMPARTMENTS PER SHOP ORDER
7. ONE ADJUSTABLE SLIDE-OUT TRAY IN COMPARTMENT PER SHOP ORDER
8. ALUMINUM PEGBOARDS IN COMPARTMENTS PER SHOP ORDER

REV	DATE	BY	CH
3	03JAN19	COL	KBO
2	08NOV18	COL	KBO

CHASSIS DATA — MAKE: PIERCE — MODEL: ENFORCER

TITLE: Pierce Pumper Approval Drawing
FOR: Victoria Fire Department

DWG NO.: 33134AD

Pierce MANUFACTURING INC.

JOB NO.	33134
SCALE	1:24
DATE	
DRAWN BY	COL
	300CT18
CHECKED BY	KBO
	310CT18
SHEET SIZE	D
SHEET NO.	1 OF 1

View File Created 08-JAN-2019 09:08:28