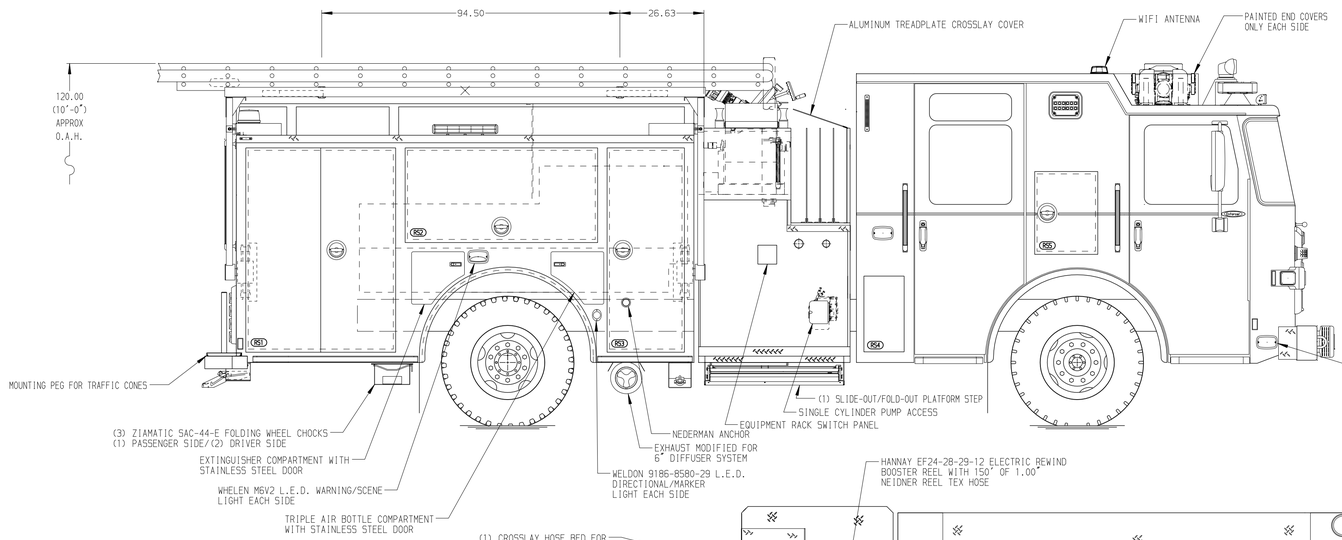

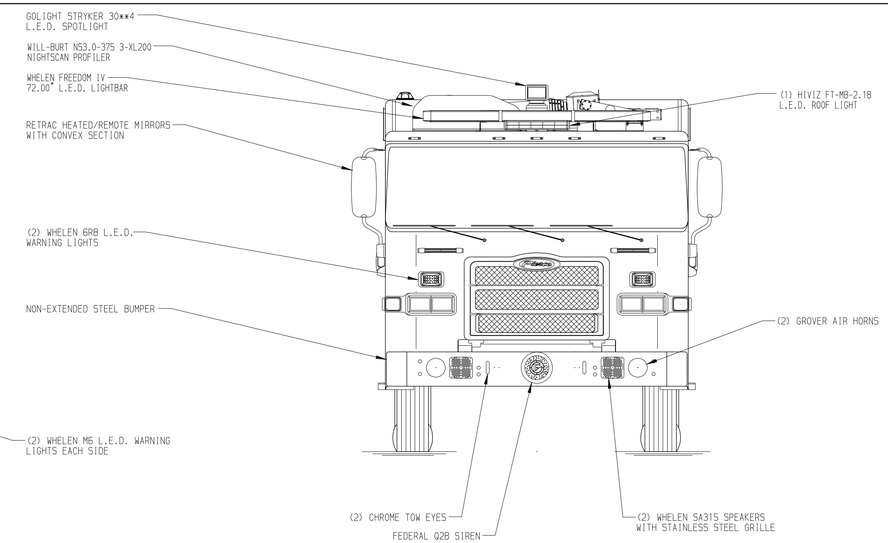

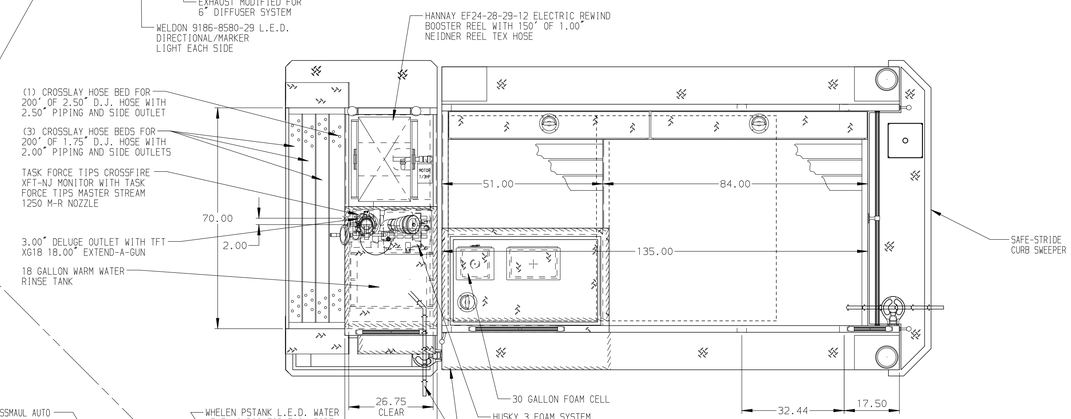

HOSEBED CAPACITIES

1. (2) 100' BUNDLES OF 2.50" D.J. POLY HOSE (1) BELOW SHELF/(1) ABOVE SHELF
2. (2) 100' BUNDLES OF 2.50" D.J. POLY HOSE (1) BELOW SHELF/(1) ABOVE SHELF
3. 150' OF 1.75" D.J. POLY HOSE
4. 150' OF 1.75" D.J. POLY HOSE
5. 400' OF 2.50" D.J. POLY HOSE
6. 1000' OF 5.00" D.J. POLY HOSE

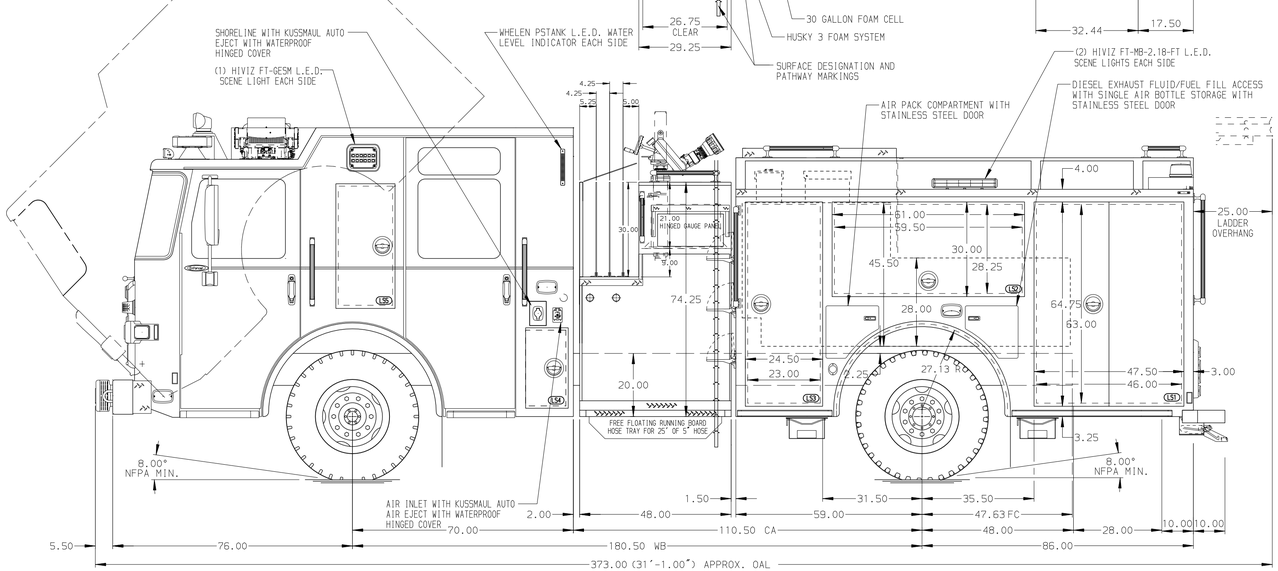

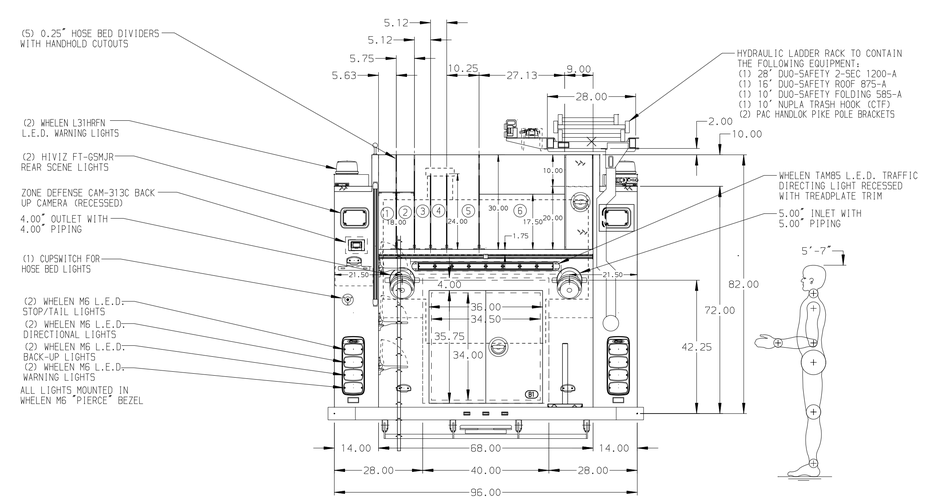

ALUMINUM BODY | MAXIMUM O.A.H. 126.00" | MAXIMUM O.A.L. 380.00" | SIDE ROLL AND FRONTAL IMPACT PROTECTION

NOTE

DIMENSIONS SHOWN ARE APPROXIMATE AND ARE SUBJECT TO MINOR DEVIATIONS AS MAY OCCUR OR BE NECESSARY IN CONSTRUCTION.
MINOR DETAILS NOT SHOWN.

1. ONSPOT AUTOMATIC TIRE CHAINS TO BE PROVIDED AT REAR
2. AIR OUTLET W/ SHUT OFF VALVE LOCATED ON DS PUMP PANEL
3. REVERSED HINGED DOOR ON COMPARTMENT LS3
4. ONE FULL WIDTH/DEPTH PAINTED ADJUSTABLE SHELF IN COMPARTMENTS LS2, LS3, RS3 & B1; TWO SHELVES IN COMPARTMENTS LS1 & RS1
5. ONE ADJUSTABLE SLIDE-OUT TRAY IN COMPARTMENT LS3
6. ONE SWING-OUT TOOLBOARD IN COMPARTMENT RS2
7. CABLE LOOP PULL FOR DOORS OF COMPARTMENTS LS1, LS3, RS1, RS3, & B1
8. PULL STRAP FOR DOORS OF COMPARTMENTS LS2 & RS2
9. PAC TRAC IN COMPARTMENTS LS1, LS3, RS1 & RS2
10. S/S SCUFFPLATES INSIDE DOOR OF COMPARTMENT LS3
11. S/S SCUFFPLATES AT CAB DOOR JAMBS
12. BATTERY CHARGER LOCATED IN CREW CAB SEAT RISER
13. BATTERY INDICATOR IN DRIVER'S SEAT RISER
14. ONE 15/20A 120V NEMA RECEPTACLE LOCATED IN COMPARTMENT LS1, RS1, & RS3
15. AMDOR LUMBAR LED WALKING SURFACE LIGHTING LOCATED PER SHOP ORDER
16. AMDOR DUAL LED LIGHT STRIPS IN HOSEBED

REV	DATE	BY	CH
7	07MAR19	LME	MSA
6	06FEB19	LME	MSA
5	27DEC18	KLE	KWI
4	16NOV18	MMF	WKL

CHASSIS DATA: PIERCE
MODEL: ENFORCER

Pierce MANUFACTURING INC.

TITLE: 2000-D-700P GAL W/30 GAL FOAM CELL, 145" SPCL PUMPER (4)XLAYS, DELUGE, BOOSTER REEL, HYD. LADDER RACK
FOR: PUGET SOUND REGIONAL FIRE AUTHORITY (MAPLE VALLEY) KENT, WASHINGTON
DWG NO.: 33214AD

JOB NO.	33214 (01-03)
SCALE	1:24
DATE	
DRAWN BY	LME 12NOV18
CHECKED BY	WKL 13NOV18
SHEET SIZE	D
SHEET NO.	1 OF 1

View File Created 14-MAR-2019 12:41:38