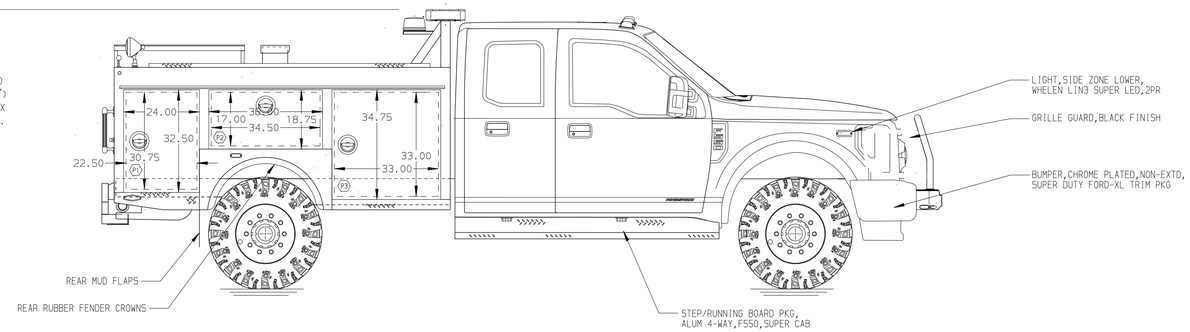

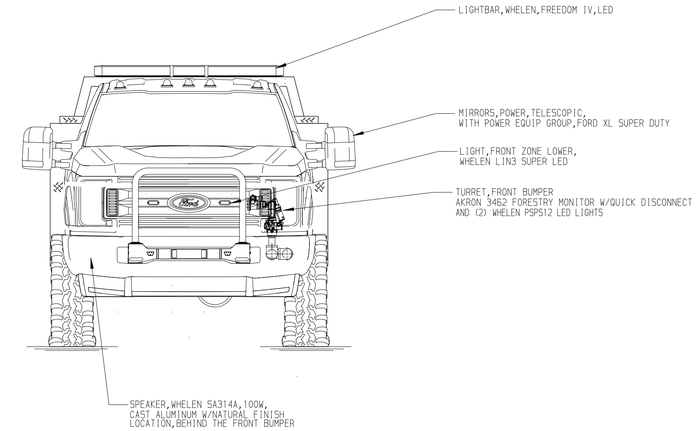

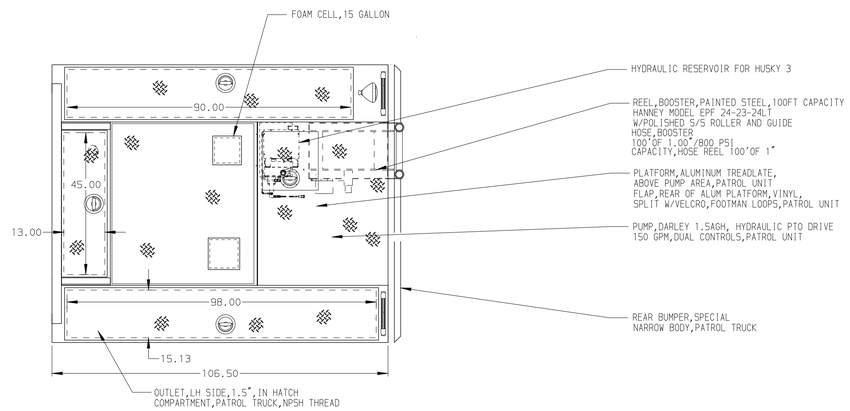

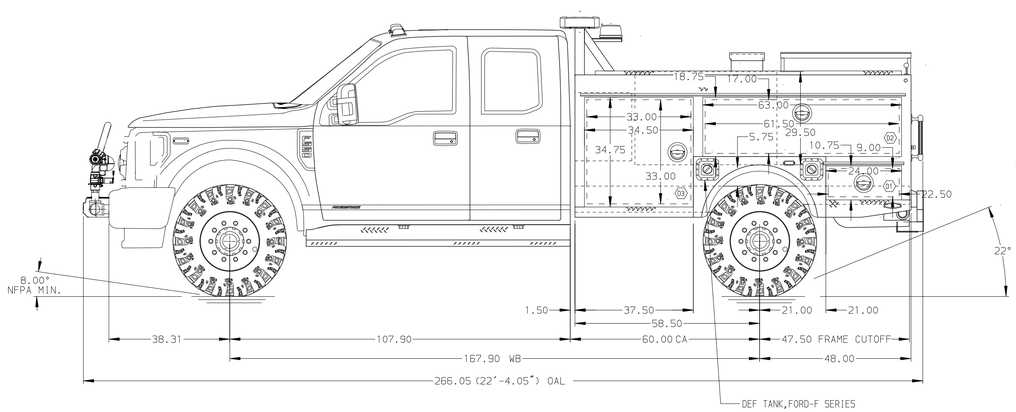

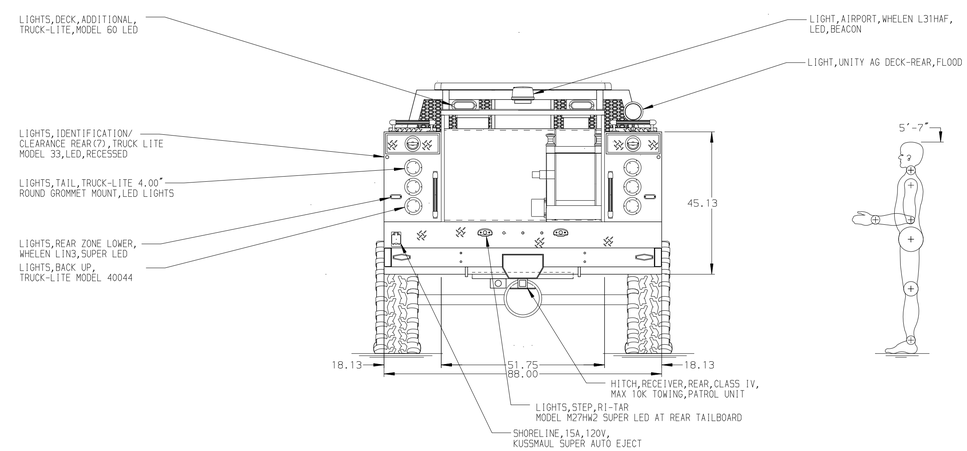

ALUMINUM BODY

MAXIMUM OVERALL HEIGHT 90.00"

NOTE

DIMENSIONS SHOWN ARE APPROXIMATE AND ARE SUBJECT TO MINOR DEVIATIONS AS MAY OCCUR OR BE NECESSARY IN CONSTRUCTION.
MINOR DETAILS NOT SHOWN.

REV.	DATE	BY	CHK'D
V	04JUN19	JBO	RJP

CHASSIS DATA
CHASSIS FORD
MODEL F-550 4X4

Pierce MANUFACTURING INC.
BRADENTON, FLORIDA

TITLE	PATROL TRUCK,60"CA BODY,235 GALLON POLY,15 FOAM DARLEY HYDRAULIC PUMP	JOB NO. 33239	SCALE 1:24
FOR	CITY AND COUNTY OF DENVER,DIA DENVER,COLORADO	DATE 20DEC18	DRAWN BY JBO
DRWG. NO.	33239AD	20DEC18	CHK'D BY RJP
		SHEET NO. 1 OF 1	SHEET SIZE D

View File Created 04-JUN-2019 09:47:51