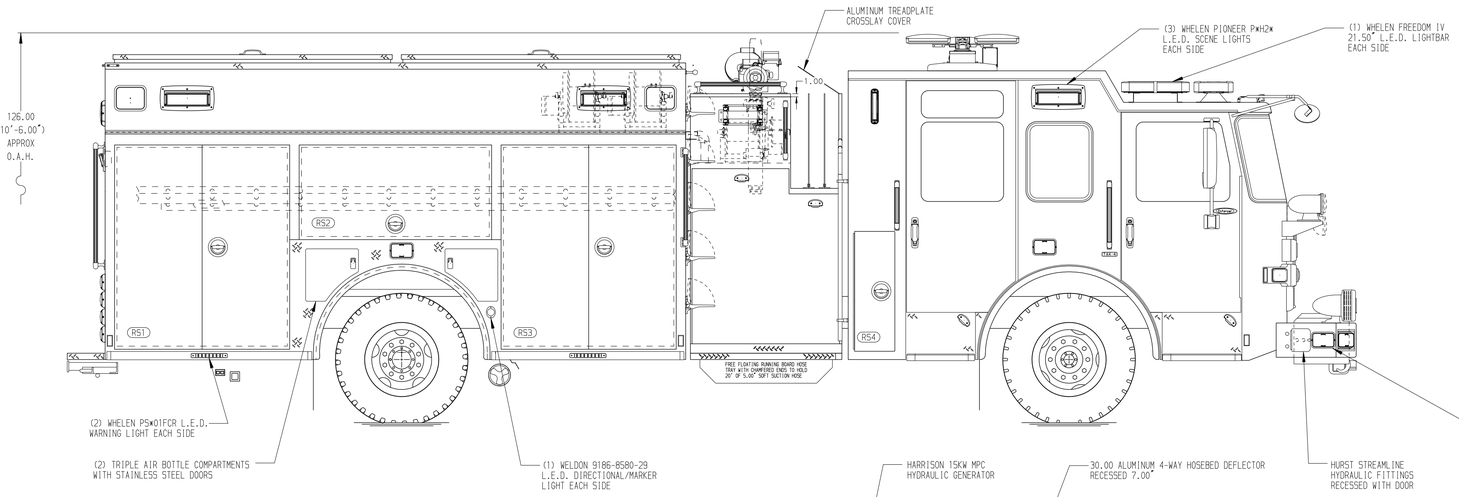

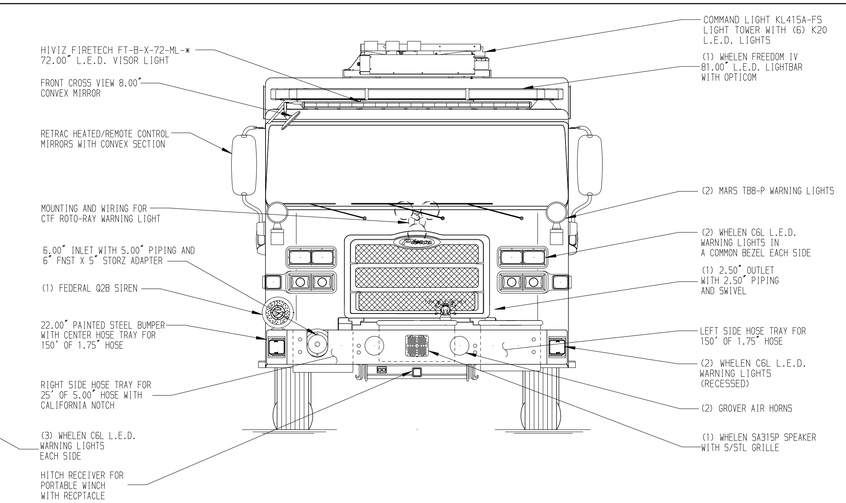

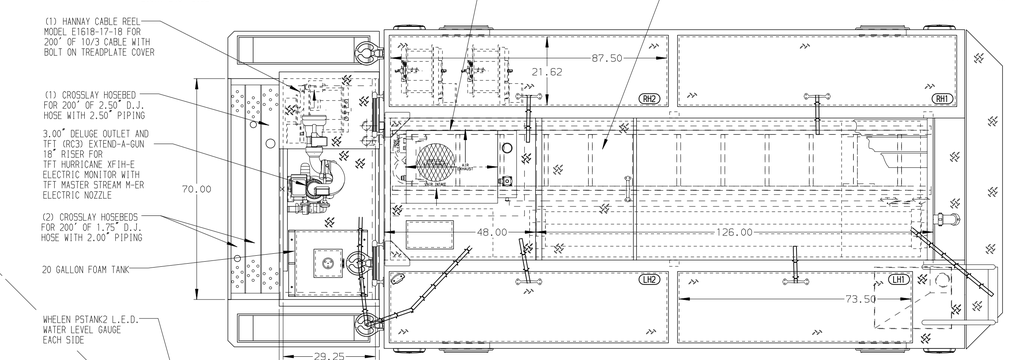

HOSEBED CAPACITIES

1. - 500' OF 3.00" MERCEDES AQUAFLOW HOSE
2. - 900' OF 5.00" MERCEDES MEGAFLOW HOSE
3. - 300' OF 1.75" MERCEDES AQUAFLOW HOSE
4. - 150' OF 1.75" MERCEDES AQUAFLOW HOSE

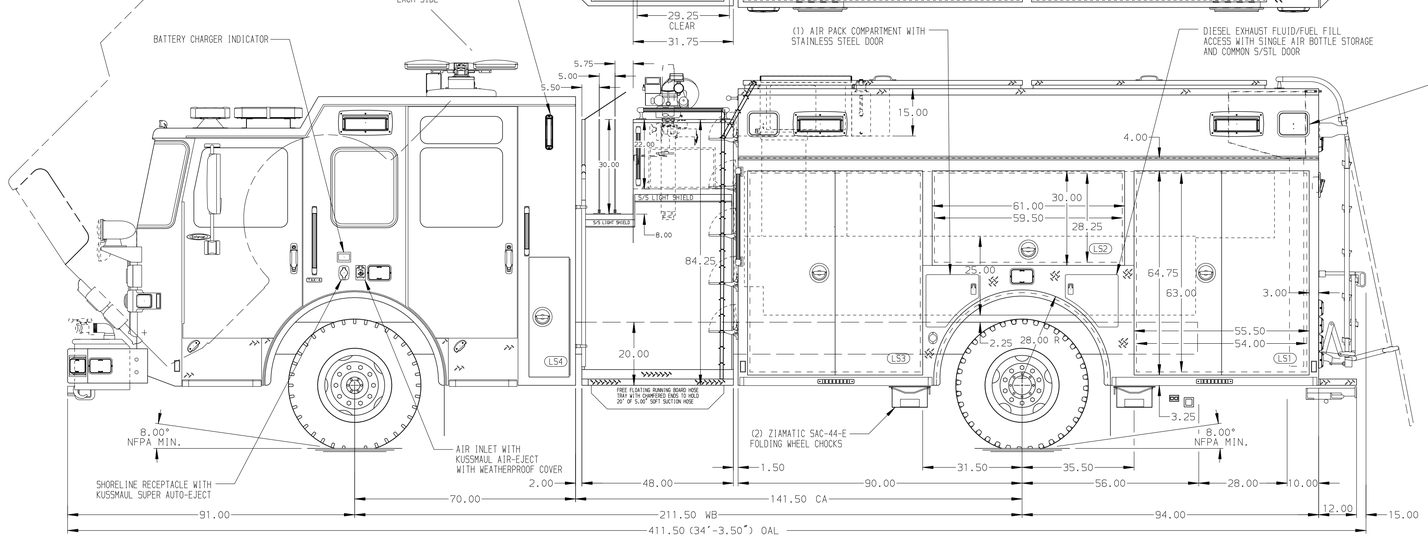

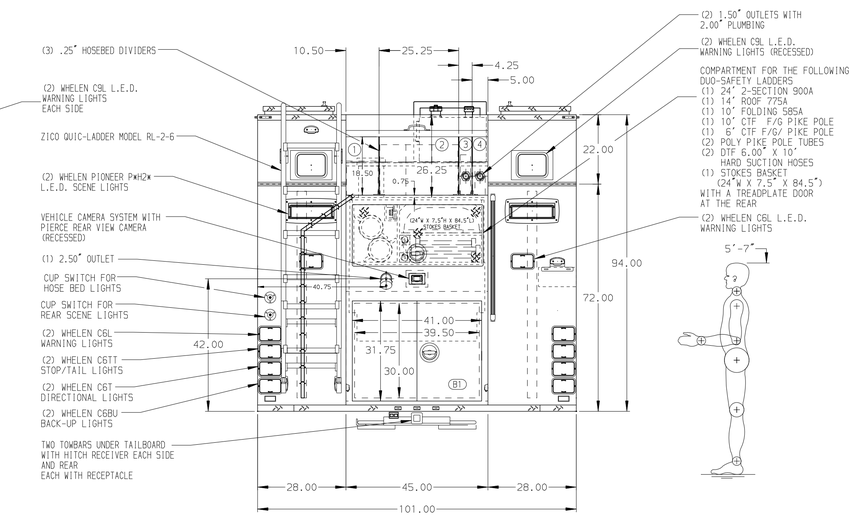

ALUMINUM BODY

MAXIMUM O.A.L. 414.00"

SIDE ROLL AND FRONTAL IMPACT PROTECTION

NOTE

DIMENSIONS SHOWN ARE APPROXIMATE AND ARE SUBJECT TO MINOR DEVIATIONS AS MAY OCCUR OR BE NECESSARY IN CONSTRUCTION.
MINOR DETAILS NOT SHOWN.

1. ROSCO WINDSHIELD MOUNTED CAMERA SYSTEM WITH DVR
2. BATTERY CHARGER LOCATED BEHIND DRIVER SEAT
3. DUAL L.E.D. LIGHT STRIPS LOCATED IN HOSE BED
4. THREE 120V DUPLEX RECEPTACLES LOCATED IN CAB

REV	DATE	BY	CH
E	10JUN19	JWO	CSH
D	28MAR19	JWO	DTS
C	13FEB19	JWO	DTS
B	09JAN19	JWO	DTS
A	30NOV18	JWO	NPA

CHASSIS DATA — MAKE: PIERCE — MODEL: ENFORCER

TITLE: 1500-D-520P, 500G WATER, 20G FOAM, 184" HDRP BODY (2) CROSSLAYS, GENERATOR, HYD REELS, CABLE REEL

FOR: COLUMBIA FIRE COMPANY, COLUMBIA, PENNSYLVANIA

DWG NO.: 33247AD-SH1

Pierce MANUFACTURING INC.

JOB NO.	33247
SCALE 1:24	DATE
DRAWN BY JWO	12NOV18
CHECKED BY NPA	16NOV18
SHEET SIZE D	SHEET NO. 1 OF 1

View File Created 20-JUN-2019 06:26:30