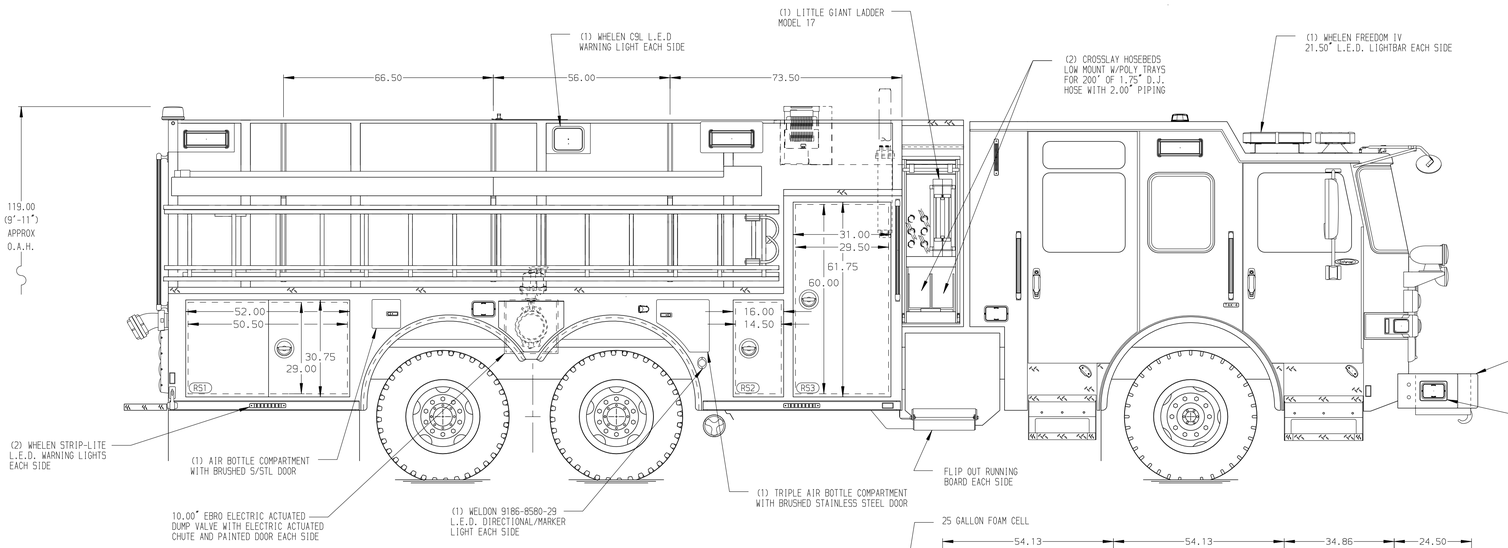

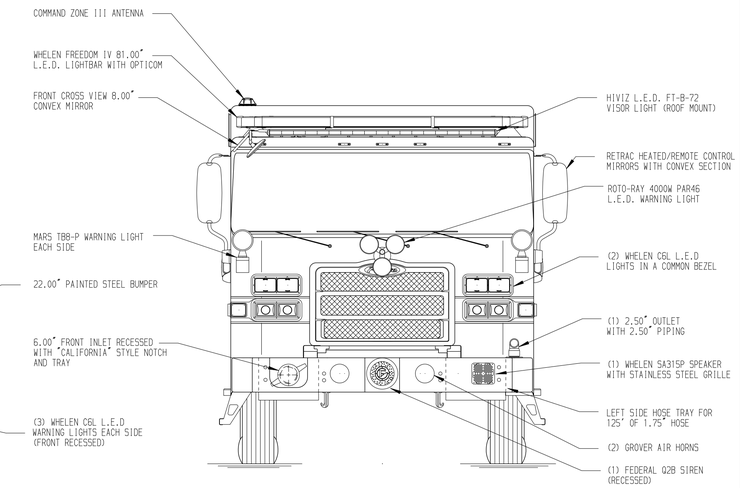

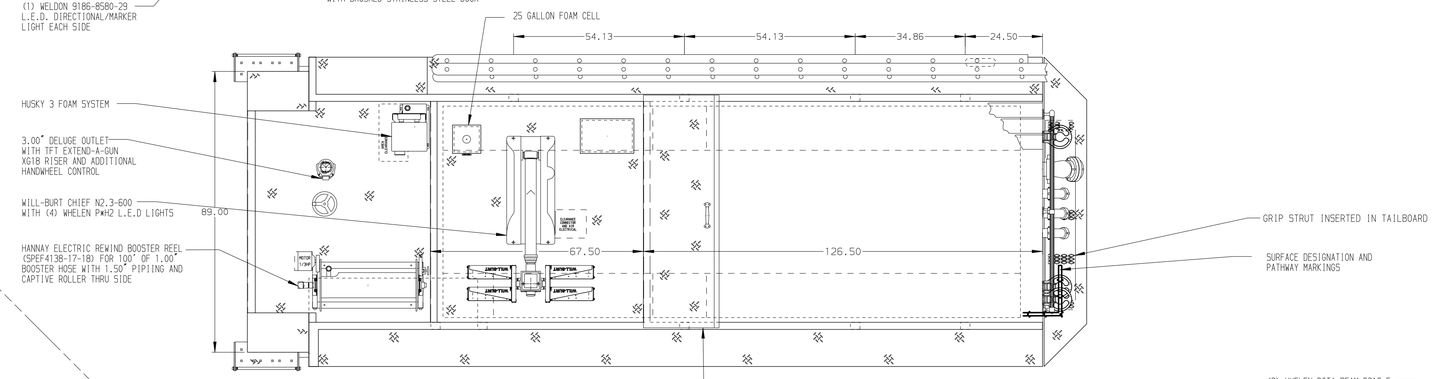

HOSEBED CAPACITIES

1. -1200' OF 5.00" MERCEDES MEGA FLOW
2. - 400' OF 3.00" MERCEDES AQUA FLOW
3. - 250' OF 3.00" MERCEDES AQUA FLOW
4. - 200' OF 2.50" MERCEDES AQUA FLOW
5. - 300' OF 1.75" MERCEDES AQUA FLOW

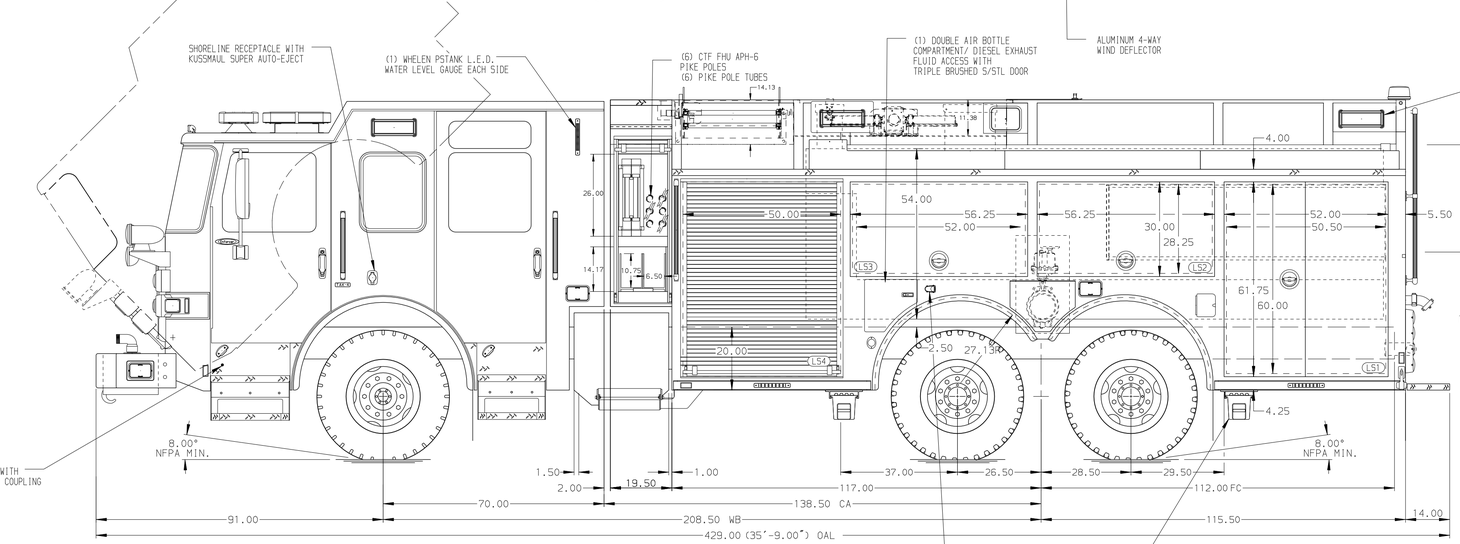

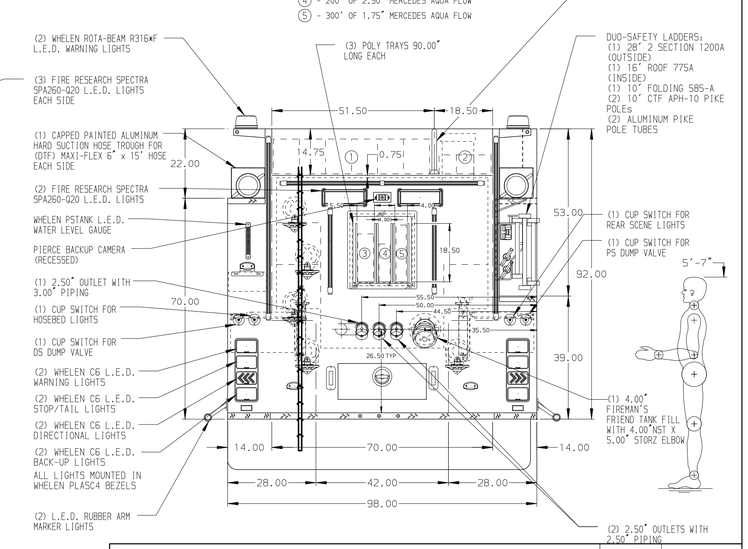

ALUMINUM BODY

SIDE ROLL AND FRONTAL IMPACT PROTECTION

NOTE

DIMENSIONS SHOWN ARE APPROXIMATE AND ARE SUBJECT TO MINOR DEVIATIONS AS MAY OCCUR OR BE NECESSARY IN CONSTRUCTION.
MINOR DETAILS NOT SHOWN.

1. ONSPOT AUTOMATIC TIRE CHAINS TO BE PROVIDED AT REAR
2. BATTERY CHARGER LOCATED BEHIND DRIVER'S SEAT
3. BATTERY CHARGE INDICATOR LOCATED ON DRIVER'S SEAT RISER
4. DUAL L.E.D. LIGHT STRIPS LOCATED IN HOSE BED
5. PULL STRAP ON DOORS IN CROSSLAY COMPARTMENT
6. ONE FULL WIDTH/DEPTH ADJUSTABLE SHELF IN COMPARTMENT RS3, LS1, LS3, & LS4
7. ONE FLOOR MOUNTED SLIDE-OUT TRAY WITH 2" SIDES IN COMPARTMENT RS1 & RS2
8. TWO 15/20A 120V DUPLEX RECEPTACLES IN CAB
9. ONE 15/20A 120V DUPLEX RECEPTACLES IN COMPARTMENTS RS2 & RS3
10. ONE SLIDE-OUT TRAY WITH 2.00" SIDES LOCATED IN COMPARTMENT LS4

REV	DATE	BY	CH
7	25FEB19	MMF	DTS
6	18JAN18	MMF	DTS
5	05DEC18	MMF	NPA

CHASSIS DATA
MAKE: PIERCE
MODEL: ENFORCER

Pierce MANUFACTURING INC.

TITLE: 1500-D-2025P, 2000G WATER, 25G FOAM, 232" PUC TANKER (2) CROSSLAYS, BOOSTER & CABLE REELS, LIGHT TOWER
FOR: MONROE FIRE COMPANY MECHANICSBURG, PENNSYLVANIA
DWG NO.: 33284AD

JOB NO.	33284
SCALE	1:24
DATE	27NOV18
DRAWN BY	MMF
CHECKED BY	NPA
SHEET SIZE	D
SHEET NO.	1 OF 1

View File Created 25-FEB-2019 11:15:17