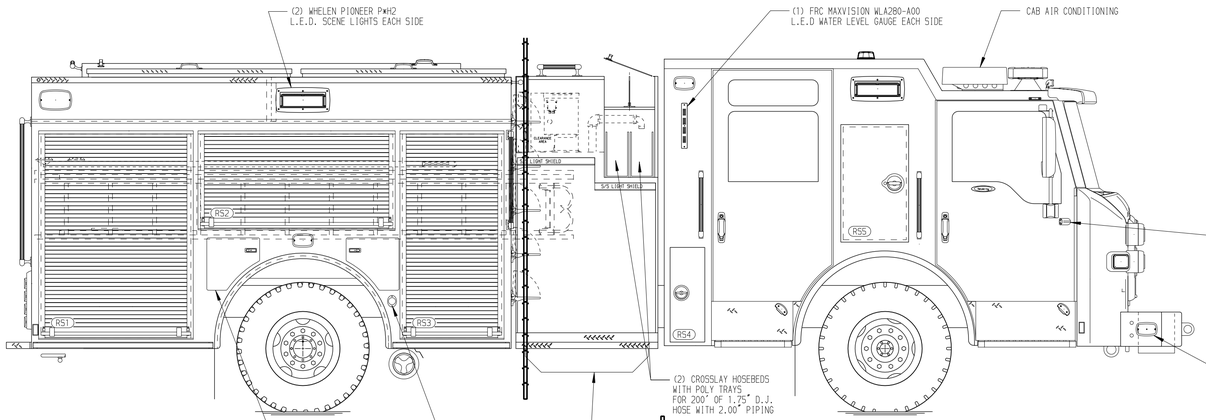

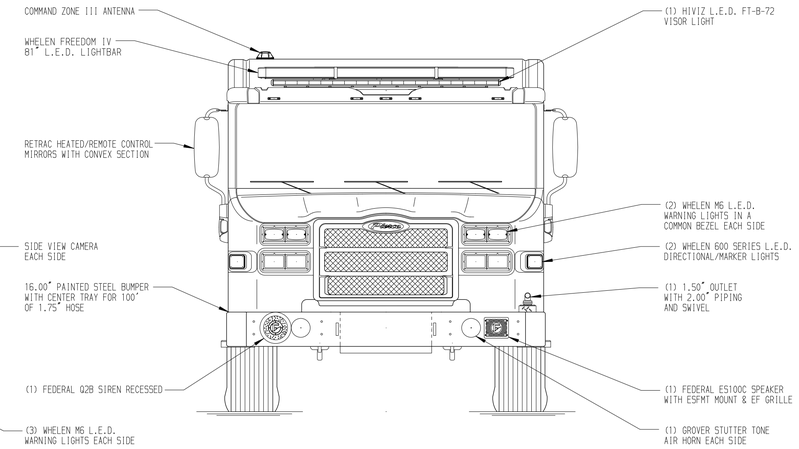

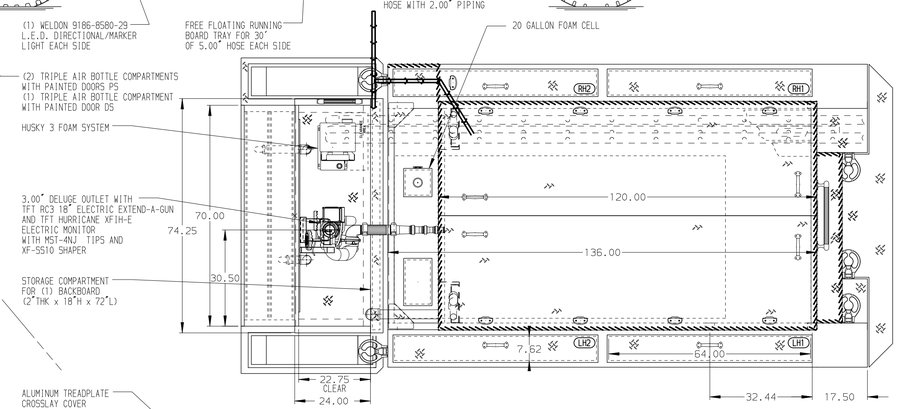

HOSEBED CAPACITIES

1 - 200' OF 2.50" D.J. HOSE
2 - 300' OF 2.50" D.J. HOSE
3 - 650' OF 5.00" LDH HOSE
4 - 600' OF 3.00" D.J. HOSE
5 - OPEN

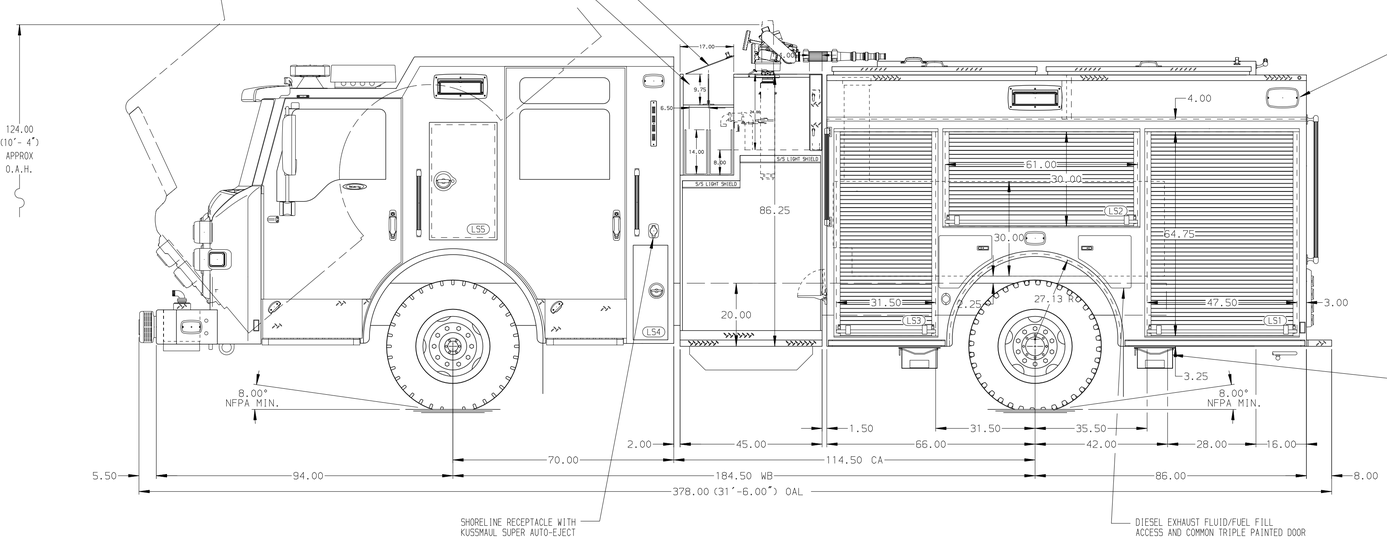

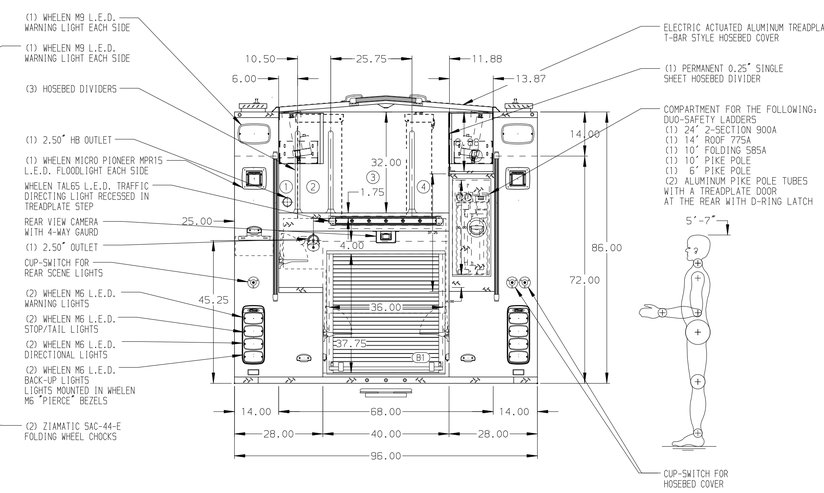

ALUMINUM BODY

NOTE

DIMENSIONS SHOWN ARE APPROXIMATE AND ARE SUBJECT TO MINOR DEVIATIONS AS MAY OCCUR OR BE NECESSARY IN CONSTRUCTION.
MINOR DETAILS NOT SHOWN.

1. AIR INLET/OUTLET WITH DISCONNECT FITTING LOCATED ON DRIVER'S SIDE PUMP PANEL
2. BATTERY CHARGER MOUNTED BEHIND DRIVER'S SEAT
3. BATTERY CHARGE INDICATOR MOUNTED ON DRIVER SIDE CREW CAB SEAT RISER
4. DRIP PAN GUARD FOR ROLL-UP DOOR LOCATED ON COMPARTMENT LS1, LS2, LS3, RS1, RS2, RS2 & B1
5. ONE FULL WIDTH/DEPTH ADJUSTABLE SHELF IN COMPARTMENT B1, TWO IN LS3 & RS3, THREE IN LS1, FOUR IN RS1
6. ONE FLOOR MOUNTED SLIDE-OUT TRAY IN COMPARTMENT LS1
7. SWING-OUT TOOL BOARD WITH PEGBOARD PATTERN IN COMPARTMENT RS2
8. CTECH DRAWER ASSEMBLY IN COMPARTMENT LS3
9. ONE VERTICAL PARTITION IN COMPARTMENT LS1
10. ALUMINUM PEGBOARD ON BACK WALL WITH TRACK IN COMPARTMENT LS3 & RS3
11. ALUMINUM PEGBOARD WITH TRACKS ON THE BACK WALL OF COMPARTMENT RS2
12. HORIZONTAL EQUIPMENT MOUNTING TRACKS IN COMPARTMENT LS2

REV	DATE	BY	CH
3	14MAR19	AMI	CHR
2	21FEB19	AMI	CHR
1	27DEC18	KLE	KWI
0	14DEC18	AMI	WKL

CHASSIS DATA
MAKE: PIERCE
MODEL: VELOCITY FR

Pierce MANUFACTURING INC.

TITLE: 1500-D-520P, 500 GAL WATER W/20 GAL FOAM, 152" BODY
FDLER, (2) XLAYS,(1) DEADLAY, DELUGE

FOR: SUNNYVALE DPS FD
SUNNYVALE, CALIFORNIA

DWG NO.: 33329AD

JOB NO.	33329 (01-04)
SCALE	1:24
DATE	
DRAWN BY	AMI
DATE	27NOV18
CHECKED BY	CCA
DATE	27NOV18
SHEET SIZE	D
SHEET NO.	1 OF 1

View File Created 14-MAR-2019 08:09:46