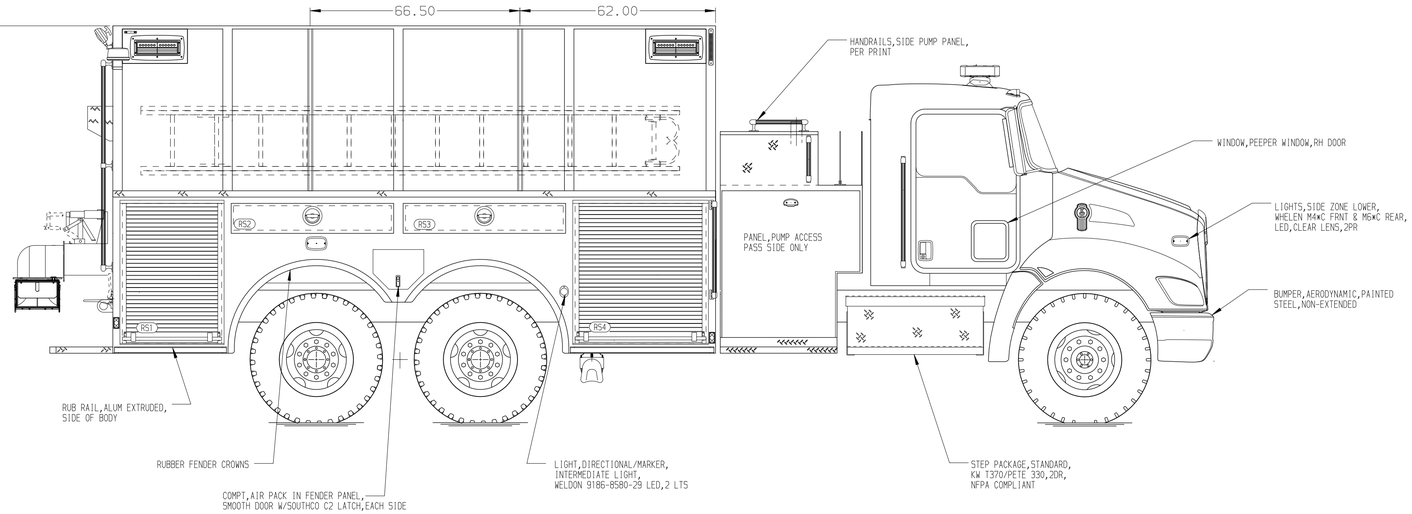

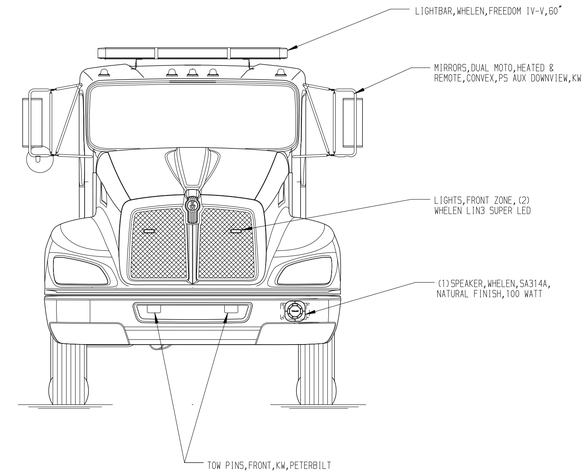

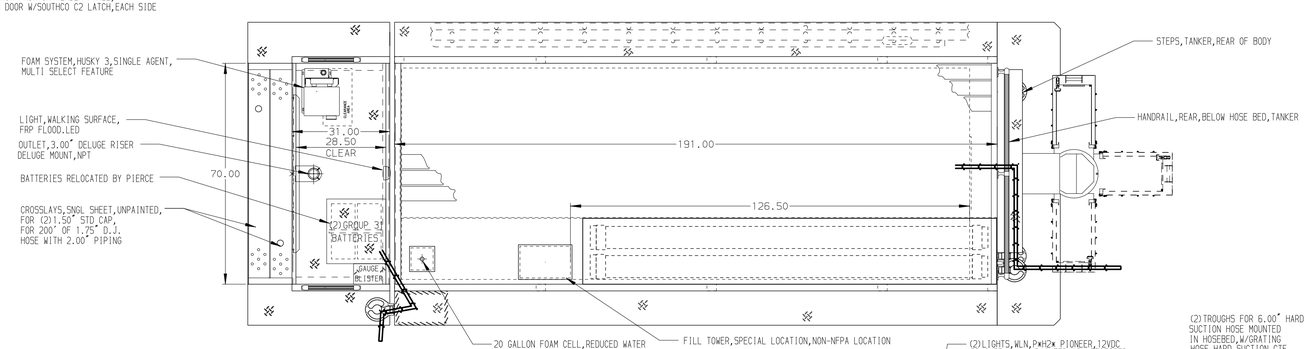

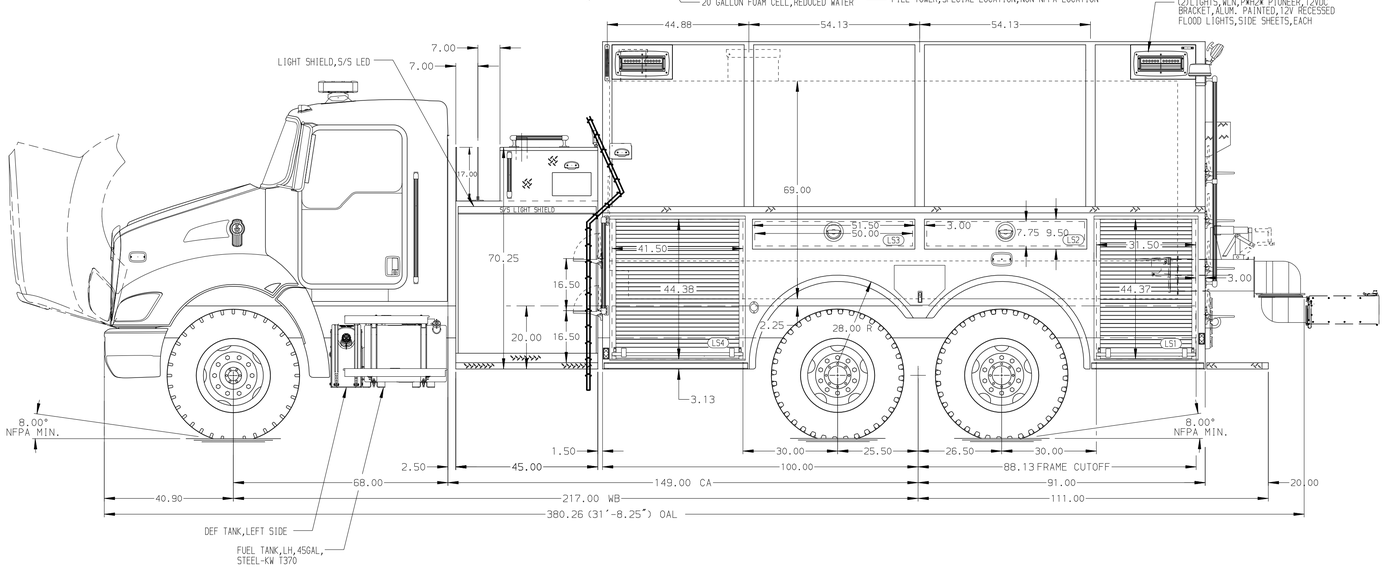

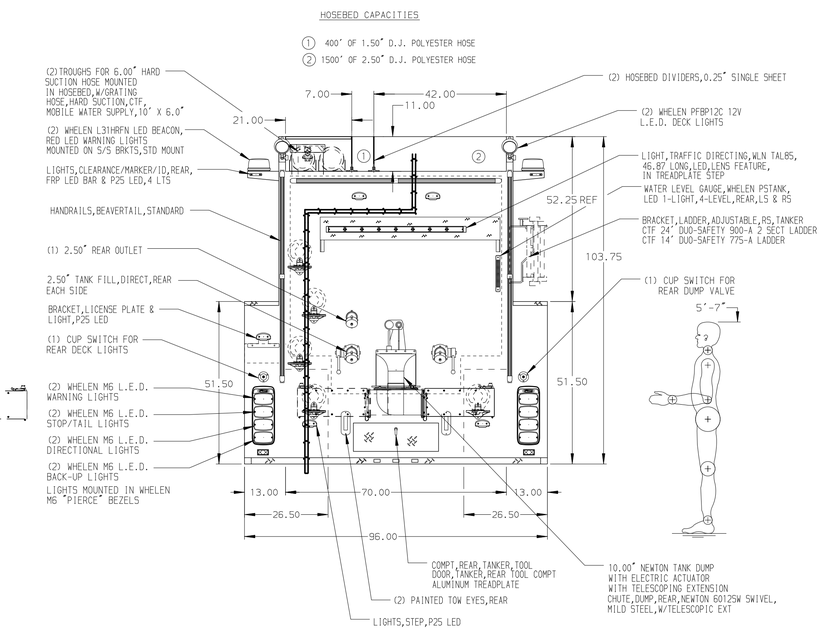

ALUMINUM BODY

NOTE

DIMENSIONS SHOWN ARE APPROXIMATE AND ARE SUBJECT TO MINOR DEVIATIONS AS MAY OCCUR OR BE NECESSARY IN CONSTRUCTION.
MINOR DETAILS NOT SHOWN.

REV	DATE	BY	CH
7	24JUN19	JAF	GSC
6	30APR19	JAF	GSC
5	09APR19	JAF	RWI

CHASSIS DATA
MAKE: KW
MODEL: T370

Pierce MANUFACTURING INC.
BRADENTON, FLORIDA

TITLE: 1000-D-2980 POLY,20 GAL FOAM TANK,191"BODY
LS & RS 3/4 BROOM COMPTS,45"SIDE CONTROL,(2)XLAYS

FOR: DEER LODGE FIRE DEPARTMENT
DEER LODGE,MONTANA

DWG NO.: 33398AD

JOB NO.	33398
SCALE	1:24
DATE	
DRAWN BY	JAF 01APR19
CHECKED BY	RWI 03APR19
SHEET SIZE	D
SHEET NO.	1 OF 1

View File Created 24-JUN-2019 13:46:35