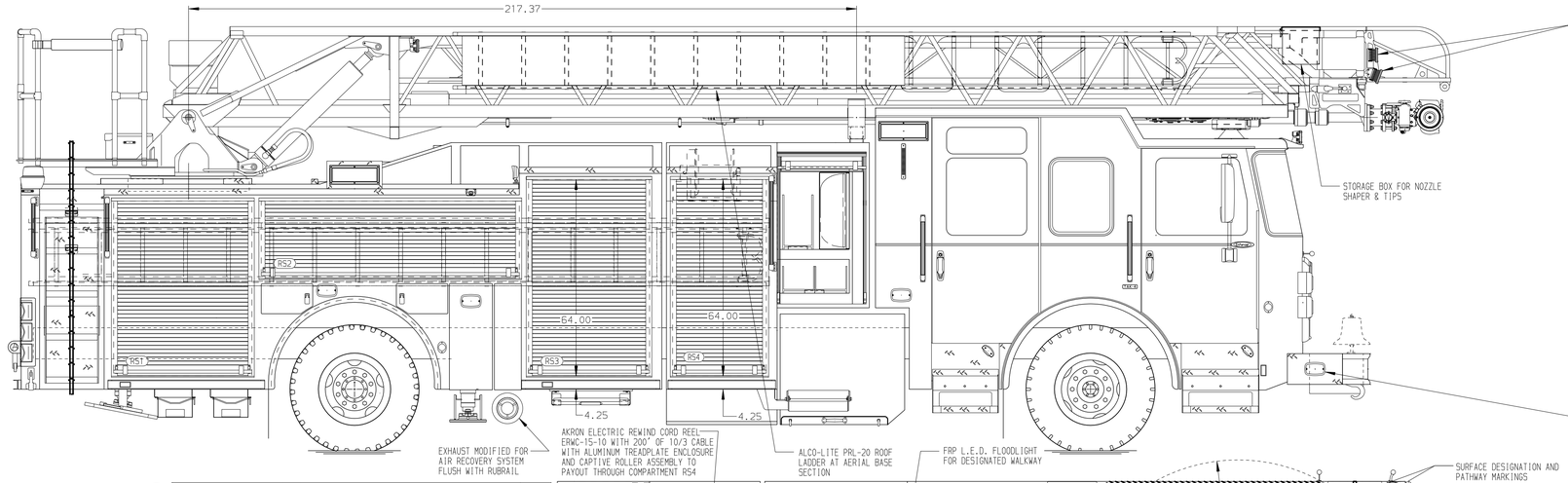

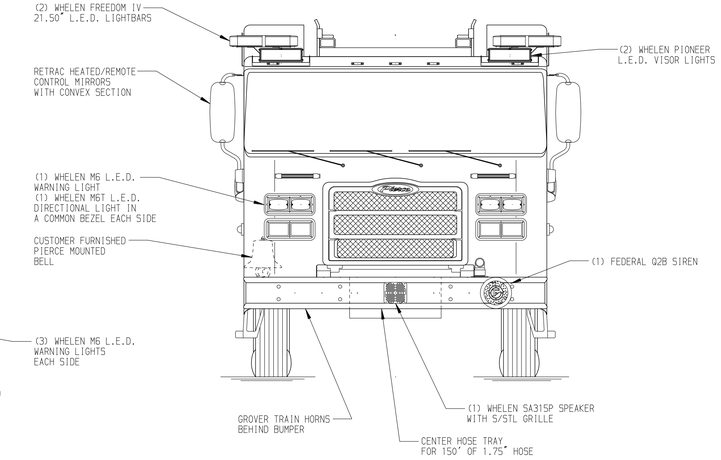

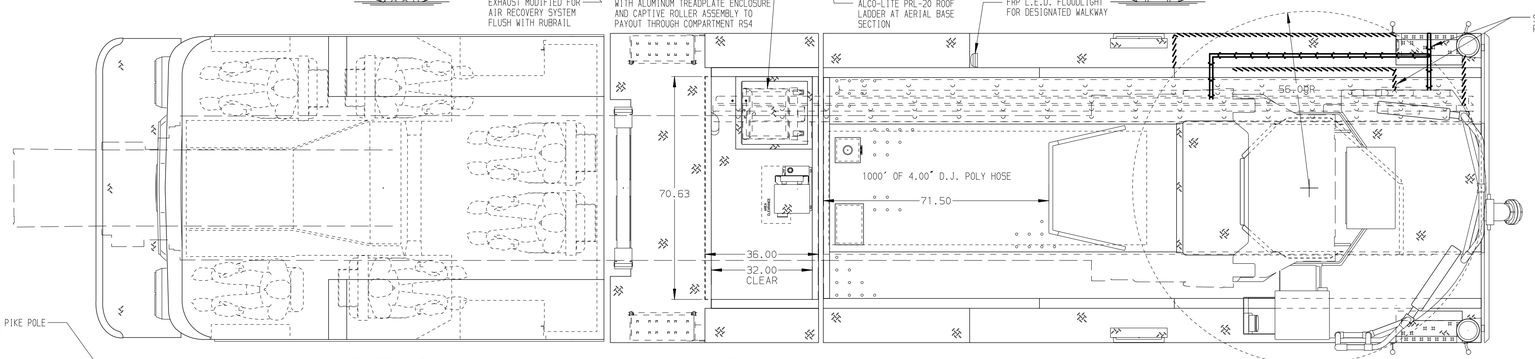

BODY	WATER TANK
107' ASL Aluminum Body PUC	480 Gallon Poly Water Tank
COMPT,LEFT SIDE FRONT	Foam System
Full Height Rollup Forward	Husky 3 Single Agent Foam System
COMPT,LEFT SIDE REAR	Foam Cell
Full Height Rollup Rearward	20 Gallon Foam Cell, Reduced Water, PUC
COMPT,RIGHT SIDE FRONT	
Full Height Rollup Forward	
COMPT,RIGHT SIDE REAR	
Full Height Rollup Rearward	

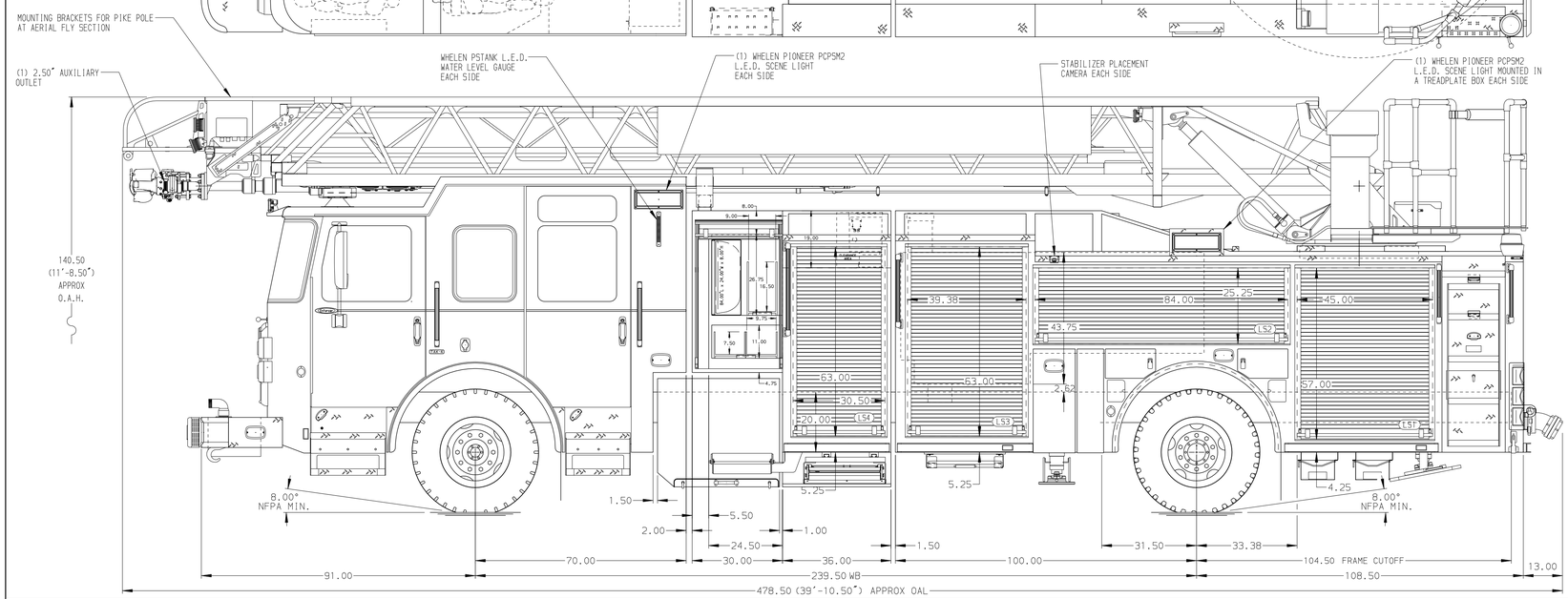

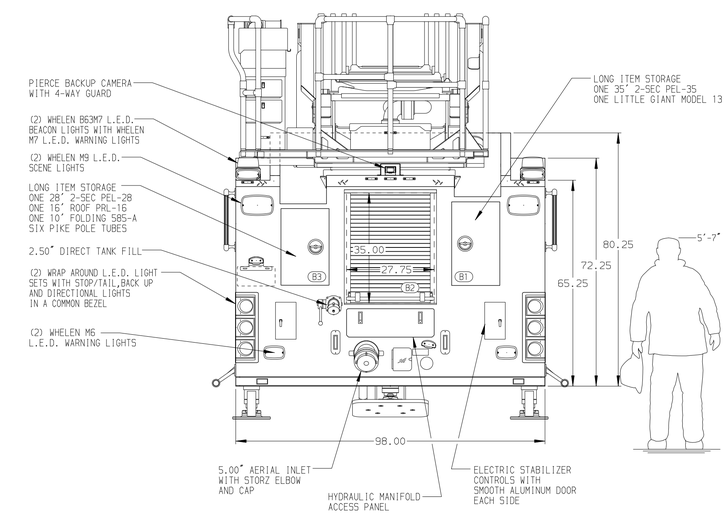

CHASSIS	CAB	AXLE,FRONT,CUSTOM	TRANSMISSION	PUMPHOUSE	CROSSLAYS,1.50"	SPEEDLAYS
Enforcer Chassis, PUC	7010 Enforcer Cab, Notched, PUC	22,800 Lb TAK-4 Axle	ALLison 5th Gen, 3000 EVS P	Control Zone, PAL/PAP PUC	(2) 1.50",Full Width Trays,200'	Speedlays Not Required
ENGINE	BUMPER	AXLE,REAR		PUMP	CROSSLAYS,2.50"	GENERATOR
450 HP Cummins L9 Engine	22" Extended Stainless Steel	33,500 Lb Meritor Axle		1500 GPM Pierce PUC	(1) 2.50",Full Width Tray,200'	Customer Furnished

NOTE

DIMENSIONS SHOWN ARE APPROXIMATE AND ARE SUBJECT TO MINOR DEVIATIONS AS MAY OCCUR OR BE NECESSARY IN CONSTRUCTION.
MINOR DETAILS NOT SHOWN.

1. ONE 2.50 OUTLET WITH 2.50 PIPING AND SWIVEL LOCATED ON THE LEFT SIDE OF THE FRONT BUMPER
2. SHORELINE RECEPTACLE WITH KUSSMAUL SUPER AUTO-EJECT LOCATED ON DRIVER SIDE OF THE CAB
3. AIR INLET WITH DISCONNECT COUPLING IN THE DRIVER SIDE STEPWELL
4. BATTERY CHARGER LOCATED IN COMPARTMENT PER SHOP ORDER
5. BATTERY CHARGE INDICATOR LOCATED ON THE DRIVER SIDE SEAT RISER
6. NINE ADJUSTABLE SHELVES IN COMPARTMENTS PER SHOP ORDER
7. FOUR FLOOR MOUNTED SLIDE-OUT TRAYS IN COMPARTMENTS PER SHOP ORDER
8. TWO ADJUSTABLE SLIDE-OUT TRAYS IN COMPARTMENTS PER SHOP ORDER
9. ONE SWING-OUT ALUMINUM TOOL BOARD IN COMPARTMENT PER SHOP ORDER
10. CTECH (3) DRAWER ASSEMBLY IN COMPARTMENT PER SHOP ORDER
11. TWO VERTICAL PARTITIONS IN COMPARTMENTS PER SHOP ORDER
12. ONE ALUMINUM PEGBOARD W/O HOLES WITH TRACKS ON THE REAR WALL OF COMPARTMENT PER SHOP ORDER
13. HOSE STORAGE RACK WITH FOUR ADJUSTABLE DIVIDERS FOR ROLLED HOSE IN COMPARTMENT PER SHOP ORDER
14. NON-RAISED AERIAL PEDESTAL
15. 1500 GPM HIGH FLOW WATERWAY
16. REMOTE LADDER CONTROLS AT AERIAL TIP
17. LIMITED RETRACTION NOT REQUIRED

MAXIMUM O.A.H. = 140.50" (11'-8.50")

REV	DATE	BY	CH
V	08FEB19	TKA	KBO

CHASSIS DATA
MAKE: PIERCE
MODEL: ENFORCER

Pierce MANUFACTURING INC.

TITLE: 107' ASCENDANT AERIAL LADDER AND BODY ASSEMBLY
-
FOR: WALDOBORO FIRE DEPARTMENT
-
DWG NO.: 33486AD

JOB NO.	SCALE	DRAWN BY	CHECKED BY	SHEET SIZE	SHEET NO.
33486	1:24	TKA	CRI	D	1 OF 1
DATE		21JAN19	28JAN19		

View File Created 08-FEB-2019 12:49:19