PASSENGER'S SIDE COMPARTMENTS CONTAIN THE FOLLOWING:

COMPARTMENT P1 CONTAINS:
- (1) FLOOR MOUNTED TRAY
- (1) STD DEPTH ADJ SHELF
-

COMPARTMENT P2 CONTAINS:
- (1) VERTICAL COMPARTMENT DIVIDER
- (1) CIRCUIT BREAKER PANEL
- (1) NIGHT SCAN CONTROLLER
- (1) GENERATOR METER PANEL
- (1) STD DEPTH ADJ SHELF
-

COMPARTMENT P3 CONTAINS:
- (1) 1/2 DEPTH ADJ SLIDE OUT/TILT TRAY
- (1) FLOOR MOUNTED TRAY
- (1) REAR WALL COMPARTMENT DIVIDER
- (1) 1/2 DEPTH ADJ SLIDE OUT TRAY
- (4) POLY TOOL BOXES
-
-

COMPARTMENT P4 CONTAINS:
- (1) 1/2 DEPTH ADJ SLIDE OUT/TILT TRAY
- (1) FLOOR MOUNTED TRAY
- (1) CAB LIFT CONTROLLER
- (1) 2-WAY ADJ SLIDE OUT TRAY
- (1) ELECTRIC CABLE REEL W/200' OF 10/3 YELLOW CORD & CAPTIVE ROLLER
-

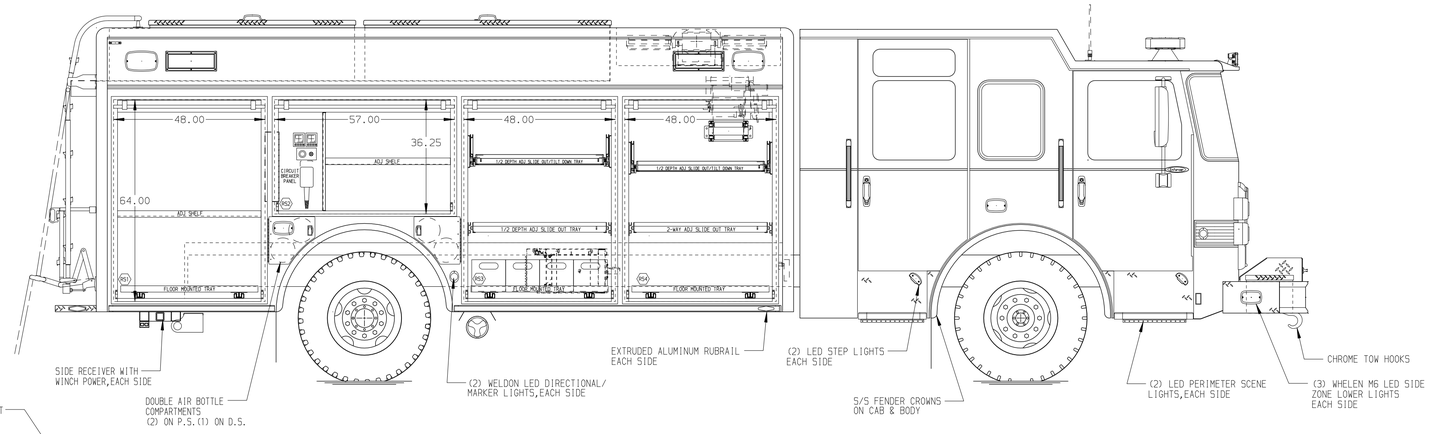

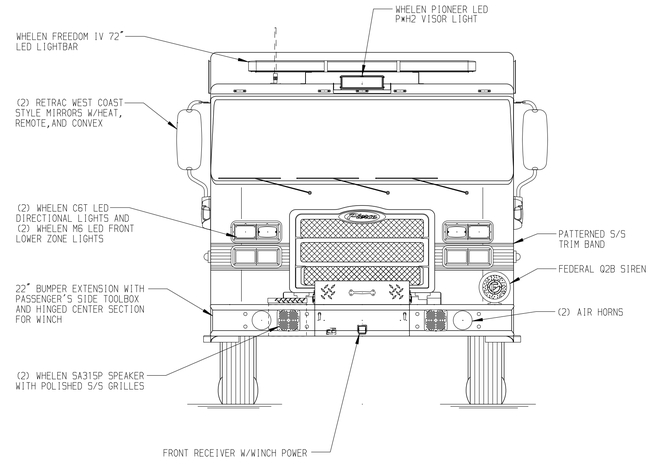

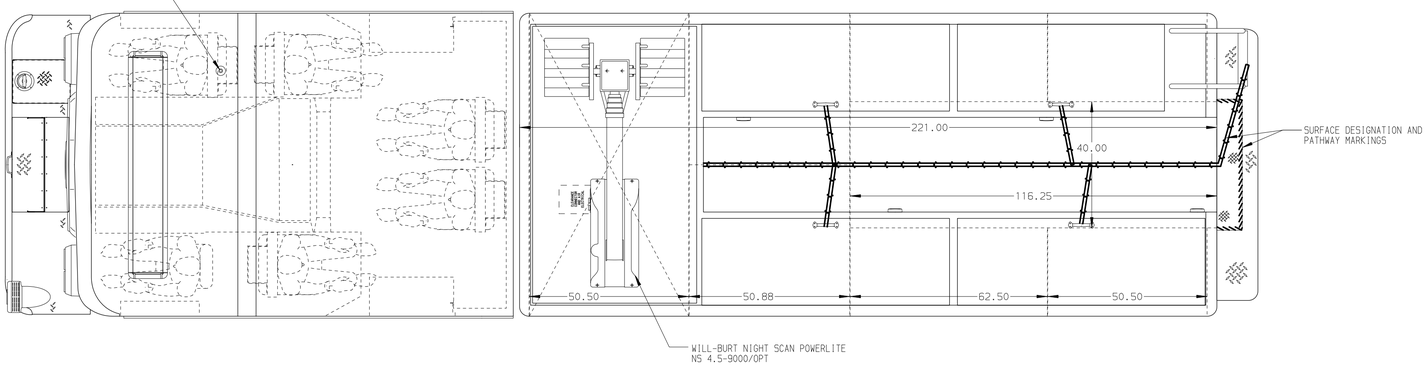

REAR COMPARTMENT CONTAINS THE FOLLOWING:

COMPARTMENT R1 CONTAINS:
- (1) 110"DP SLIDE OUT TRAY
- (1) FLOOR MOUNTED TRAY
- (1) STOKES BASKET RACK
-

DRIVER'S SIDE COMPARTMENTS CONTAIN THE FOLLOWING:

COMPARTMENT D1 CONTAINS:
- (2) STD DEPTH ADJ SLIDE OUT TOOLBOARDS
-
-
-
-

COMPARTMENT D2 CONTAINS:
- (1) STD DEPTH ADJ SHELF
-

COMPARTMENT D3 CONTAINS:
- (1) 1/2 DEPTH ADJ SLIDE OUT/TILT TRAY
- (1) 1/2 DEPTH ADJ SLIDE OUT TRAY
- (1) FLOOR MOUNTED TRAY
- (1) REAR WALL COMPARTMENT DIVIDER
-
-

COMPARTMENT D4 CONTAINS:
- (1) 1/2 DEPTH ADJ SLIDE OUT/TILT TRAY
- (1) 2-WAY ADJ SLIDE OUT TRAY
- (1) FLOOR MOUNTED TRAY
- (1) ELECTRIC CABLE REEL W/200' OF 10/3 YELLOW CORD & CAPTIVE ROLLER
-

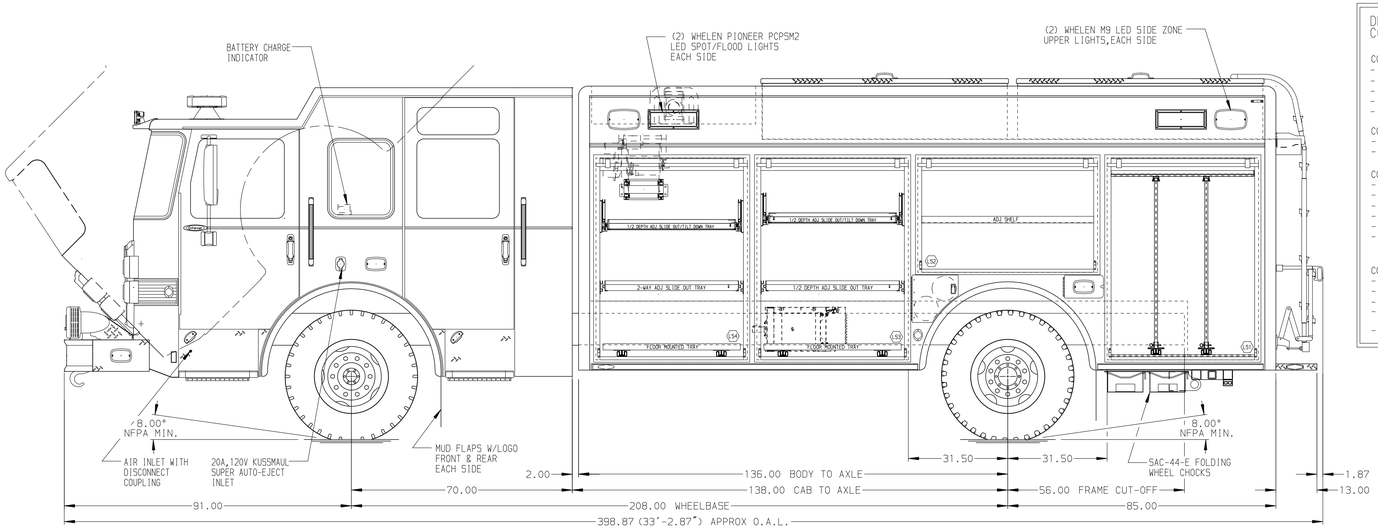

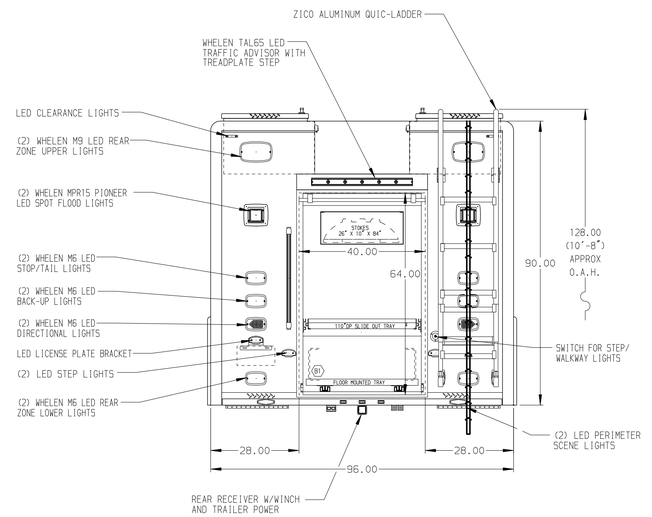

NOTE

DIMENSIONS SHOWN ARE APPROXIMATE AND ARE SUBJECT TO MINOR DEVIATIONS AS MAY OCCUR OR BE NECESSARY IN CONSTRUCTION.
MINOR DETAILS NOT SHOWN.

NOTES:
1. WARN #9,000 PORTABLE WINCH
2. FLOOR IN CAB AND CREW CAB TO BE PADDED RUBBER
3. PULL STRAPS ON ALL BODY ROLL UP DOORS
4. S/S GUARDS ON ALL BODY ROLL UP DOORS
5. PIERCE LED LIGHT STRIPS IN ALL BODY AND HATCH COMPARTMENTS
6. ONAN 25kW SINGLE PHASE PTO DRIVEN GENERATOR WITH SPLASH GUARD LOCATED BETWEEN THE FRAME RAILS
7. IOTA 75 AMP BATTERY CHARGER LOCATED BEHIND THE DRIVER'S SEAT

SIDE ROLL & FRONTAL IMPACT PROTECTION

CLEAR DOOR WIDTH KEY	
AMDOR ROLL UP DOORS:	-2 1/4"
GORTITE ROLL UP DOORS:	-2 1/2"
PIERCE DOUBLE LAP DOORS:	-4 1/4"
PIERCE LIFT-UP LAP DOORS:	-1 1/2"
(EX: 60"F-F - 2 1/4"= 57 3/4" CLEAR) (F-F)= FRAME TO FRAME	

REV	DATE	BY	CH
7	26MAR19	DHE	AZU

CHASSIS DATA
MAKE: PIERCE
MODEL: EN7010

CUSTOMER APPROVAL
APPROVED BY:
DATE:

PIERCE MANUFACTURING INC.

TITLE: HEAVY DUTY RESCUE NON-WALKIN
FOR: PIERCE STOCK -
DWG NO.: 33504AD

JOB NO.	33504
SCALE	1:24
DATE	
DRAWN BY	DHE 04MAR19
CHECKED BY	CDK 04MAR19
SHEET SIZE	D
SHEET NO.	1 OF 1

View File Created 26-MAR-2019 11:06:56