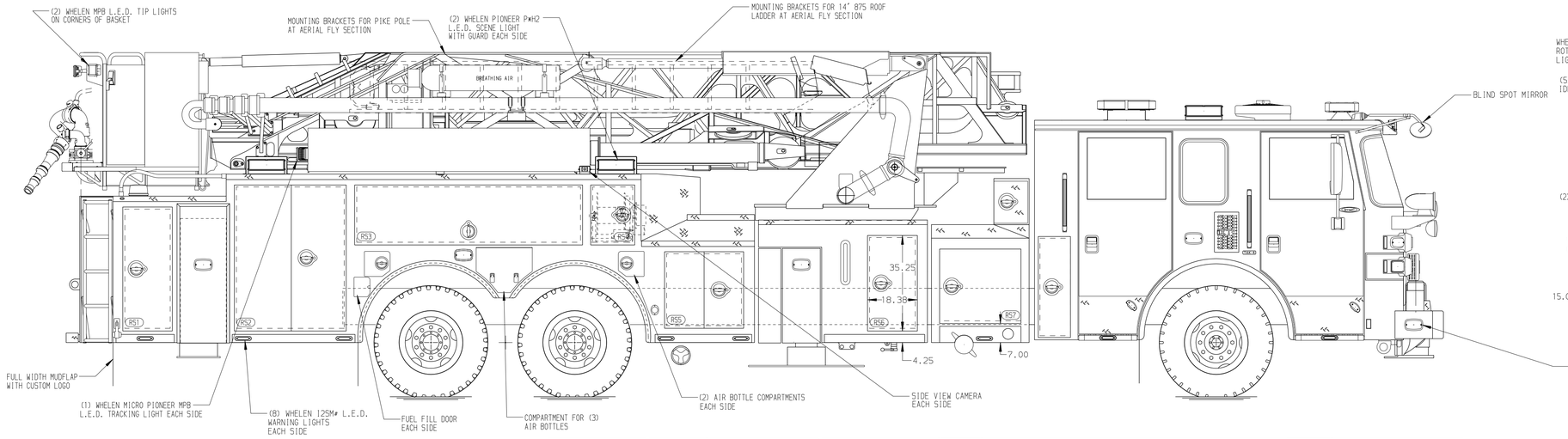

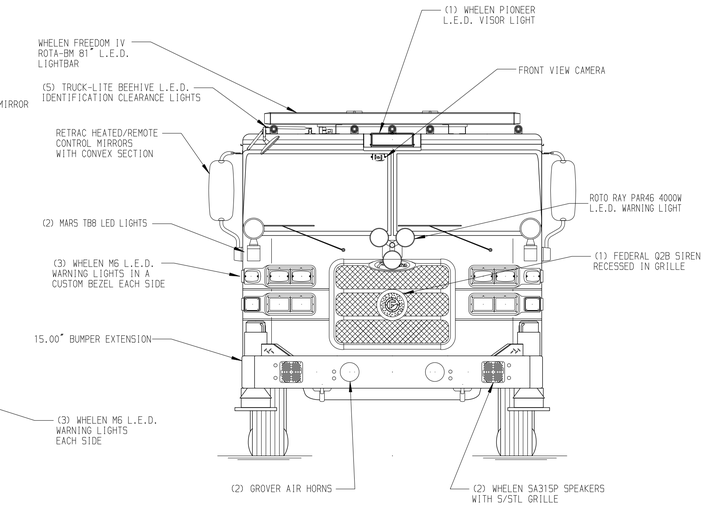

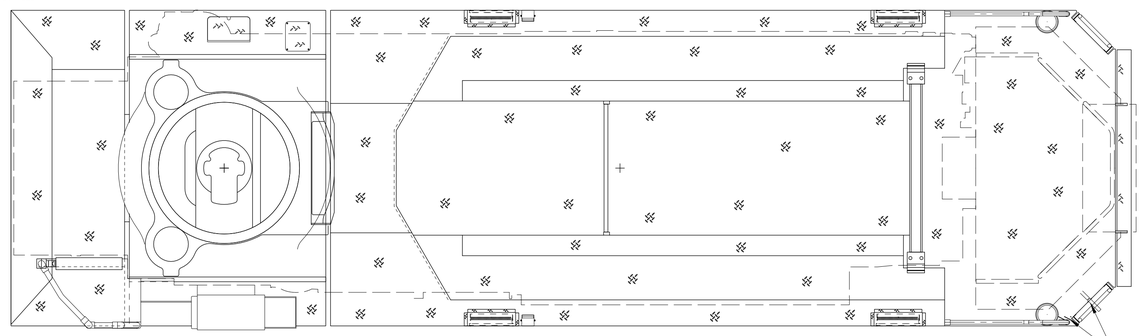

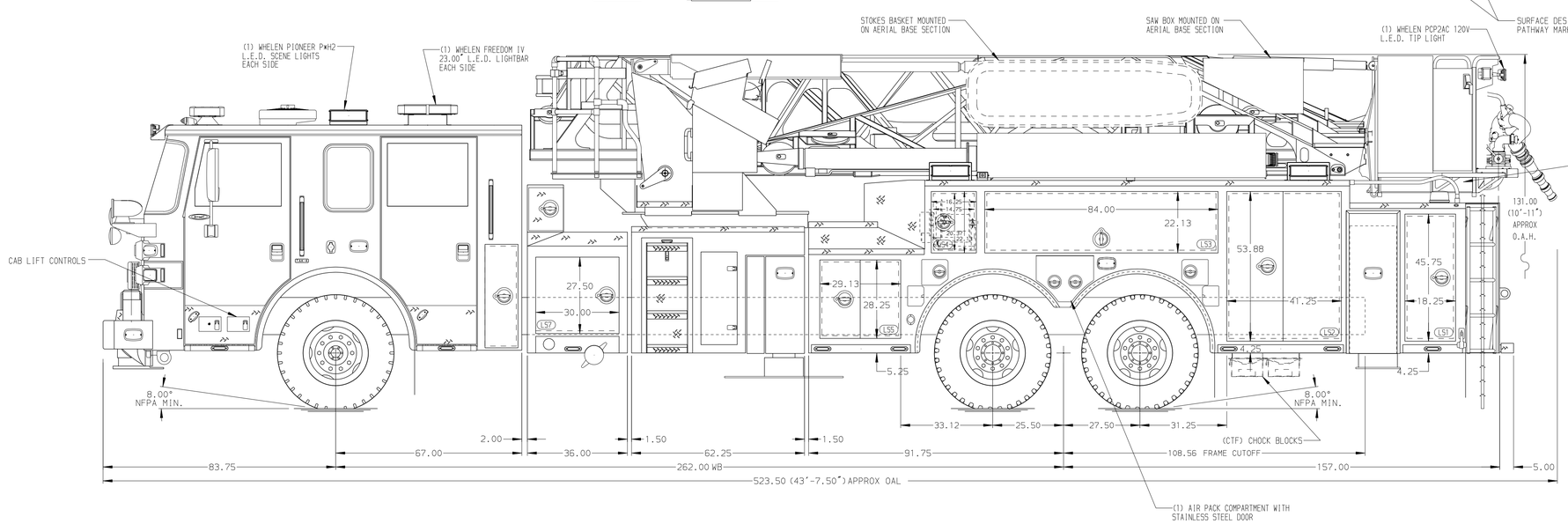

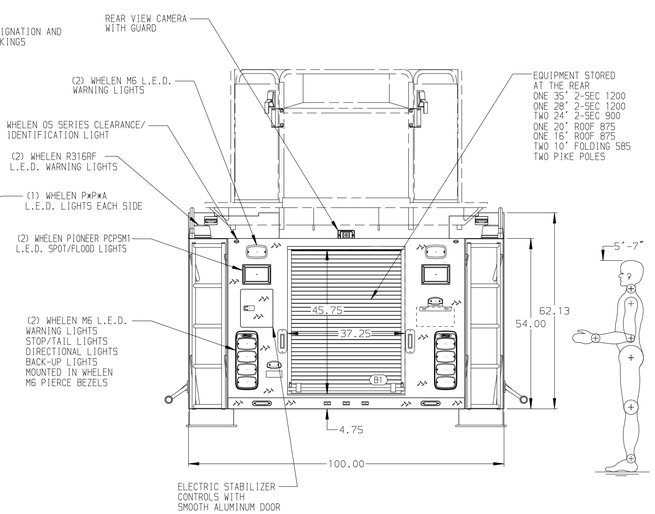

NOTE

DIMENSIONS SHOWN ARE APPROXIMATE AND ARE SUBJECT TO MINOR DEVIATIONS AS MAY OCCUR OR BE NECESSARY IN CONSTRUCTION.
MINOR DETAILS NOT SHOWN.

1. SHORELINE RECEPTACLE WITH KUSSMAUL SUPER AUTO-EJECT LOCATED ON DRIVER SIDE OF THE CAB
2. AIR INLET WITH DISCONNECT COUPLING IN THE DRIVER SIDE STEPWELL
3. BATTERY CHARGER LOCATED BEHIND DRIVER'S SEAT
4. BATTERY CHARGE INDICATOR LOCATED NEAR DRIVER SEAT RISER WITH BRACKET
5. HARRISON 6 KW MID GENERATOR LOCATED IN COMPARTMENT PER SHOP ORDER
6. NON-RAISED AERIAL PEDESTAL
7. 3-in-1 LYFECOMBO BRACKETS AT AERIAL BASKET
8. 2-WAY INTERCOM SYSTEM BETWEEN AERIAL TIP AND TURNTABLE
9. TWO HANNAY 1618-17-18 CABLE REELS WITH 200' OF 10/3 IN COMPARTMENTS PER SHOP ORDER
10. ONSPOT AUTOMATIC TIRE CHAINS
11. CIRCUIT BREAKER PANEL IN COMPARTMENT PER SHOP ORDER
12. EIGHT 120V DUPLEX RECEPTACLE LOCATED IN COMPARTMENTS PER SHOP ORDER
13. RUNG LIGHTING ON AERIAL BASE SECTION

REV	DATE	BY	CH
7	30DEC19	SVA	CRI
6	15NOV19	SVA	DTS
5	04NOV19	SVA	DTS
4	15OCT19	SVA	DTS
3	18JUL19	SVA	NDA

CHASSIS DATA
MAKE: PIERCE
MODEL: ARROW XT

Pierce MANUFACTURING INC.

TITLE: 100' ASCENDANT AERIAL PLATFORM AND BODY ASSEMBLY NO PUMP / NO TANK

FOR: WALDORF VOLUNTEER FIRE DEPARTMENT WALDORF, MD

DWG NO.: 33508AD

JOB NO.	33508
SCALE	1:24
DATE	
DRAWN BY	SVA
	25JUN19
CHECKED BY	CRI
	08JUL19
SHEET SIZE	D
SHEET NO.	1 OF 1

View File Created 05-MAR-2020 09:57:57