RIGHT SIDE COMPARTMENTS
CONTAIN THE FOLLOWING:

COMPARTMENT RS1 CONTAINS:
- (1) #750 FLOOR MOUNTED TRAY
- (1) 15/20A,120V DUPLEX RECEPTACLE
- (2) HYDRAULIC HOSE REELS WITH 100' OF CORE TECH HOSE ON EACH
- (1) SWITCH FOR PASSENGERS SIDE SCENE LIGHTS
- (2) REMOTE SWITCHES FOR HYDRAULIC POWER UNITS
- (1) REMOTE SWITCH FOR PTO GENERATOR

COMPARTMENT RS2 CONTAINS:
- (1) STD DEPTH ADJ SLIDE OUT/TILT TRAY
- (1) 15/20A,120V DUPLEX RECEPTACLE

COMPARTMENT RS3 CONTAINS:
- (1) HORIZONTAL FLOOR EXTENSION
- (1) STD DEPTH FLOOR MOUNTED TRAY
- (1) 1/2 DEPTH ADJ SLIDE OUT TOOLBOARD
- (2) 2-WAY ADJ SLIDE OUT TOOLBOARDS
- (1) 15/20A,120V DUPLEX RECEPTACLE

COMPARTMENT RS4 CONTAINS:
- (1) 6-DRAWER C-TECH CABINET
- (1) RACK FOR 6 SCBA BOTTLES
- (1) 15/20A,120V DUPLEX RECEPTACLE
- (1) CASCADE SYSTEM CONTROL PANEL
- (1) "SPACESAVER"2-BOTTLE FILL ENCLOSURE
- (1) TOOL AIR REEL W/150' OF BLUE HOSE
- (1) CIRCUIT BREAKER PANEL
- (1) GENERATOR METER PANEL
- (1) LIGHT TOWER CONTROLLER
- (1) AIR COMPRESSOR CONTOL PANEL
- (1) AWNING CONTROLS
- (1) VERTICAL REAR WALL DIVIDER

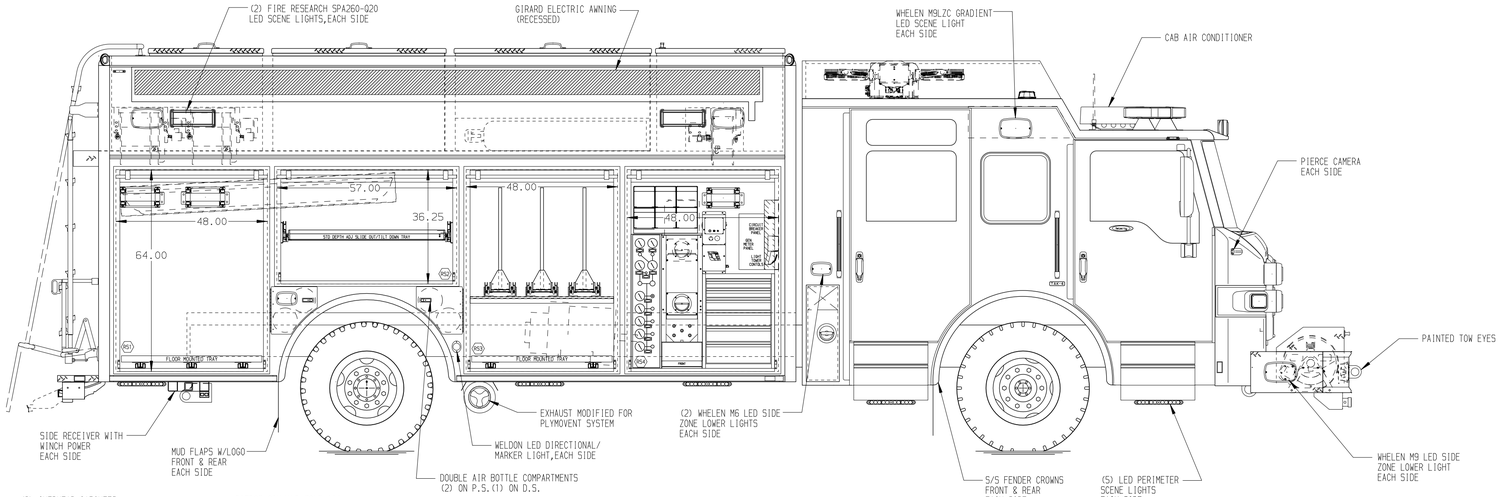

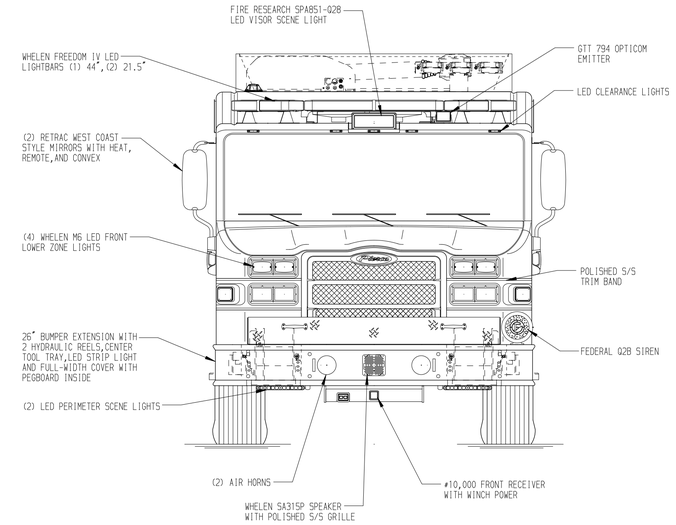

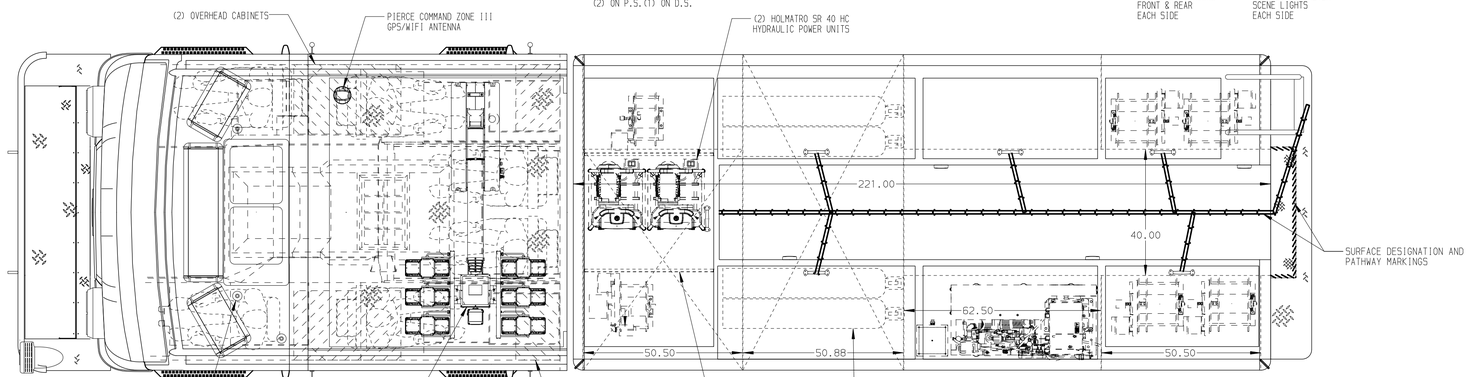

REAR COMPARTMENT CONTAINS
THE FOLLOWING:

COMPARTMENT B1 CONTAINS:
- (1) HORIZONTAL FLOOR EXTENSION
- (1) 110"DP ADJ SLIDE OUT TRAY
- (1) 110"DP FLOOR MOUNTED SLIDE OUT TRAY
- (1) STD DEPTH FLOOR MOUNTED TRAY WITH SIDE SLIDES
- (1) 15/20A,120V DUPLEX RECEPTACLE
- (1) STOKES BASKET STORAGE RACK

LEFT SIDE COMPARTMENTS
CONTAIN THE FOLLOWING:

COMPARTMENT LS1 CONTAINS:
- (1) STD DEPTH ADJ SLIDE OUT/TILT TRAY
- (1) STD DEPTH FLOOR MOUNTED TRAY
- (1) 15/20A,120V DUPLEX RECEPTACLE
- (2) HYDRAULIC HOSE REELS WITH 100' OF CORE TECH HOSE ON EACH
- (1) SWITCH FOR DRIVERS SIDE SCENE LIGHTS
- (1) VERTICAL COMPARTMENT DIVIDER

COMPARTMENT LS2 CONTAINS:
- (1) SCOTT 10HP 6000 PSI BREATHING AIR COMPRESSOR

COMPARTMENT LS3 CONTAINS:
- (1) HORIZONTAL FLOOR EXTENSION
- (1) STD DEPTH FLOOR MOUNTED TRAY
- (1) 1/2 DEPTH ADJ SLIDE OUT TOOLBOARD
- (2) 2-WAY ADJ SLIDE OUT TOOLBOARDS
- (1) 15/20A,120V DUPLEX RECEPTACLE

COMPARTMENT LS4 CONTAINS:
- (1) HORIZONTAL FLOOR EXTENSION
- (1) 3/4 DEPTH ADJ 15 DEG SLIDE OUT TILT TRAY
- (1) 3/4 DEPTH FLOOR MOUNTED SLIDE OUT TRAY
- (1) STD DEPTH FLOOR MOUNTED TRAY
- (1) ELECTRIC CORD REEL WITH 150' OF 10/4 YELLOW CORD
- (1) 15/20A,120V DUPLEX RECEPTACLE

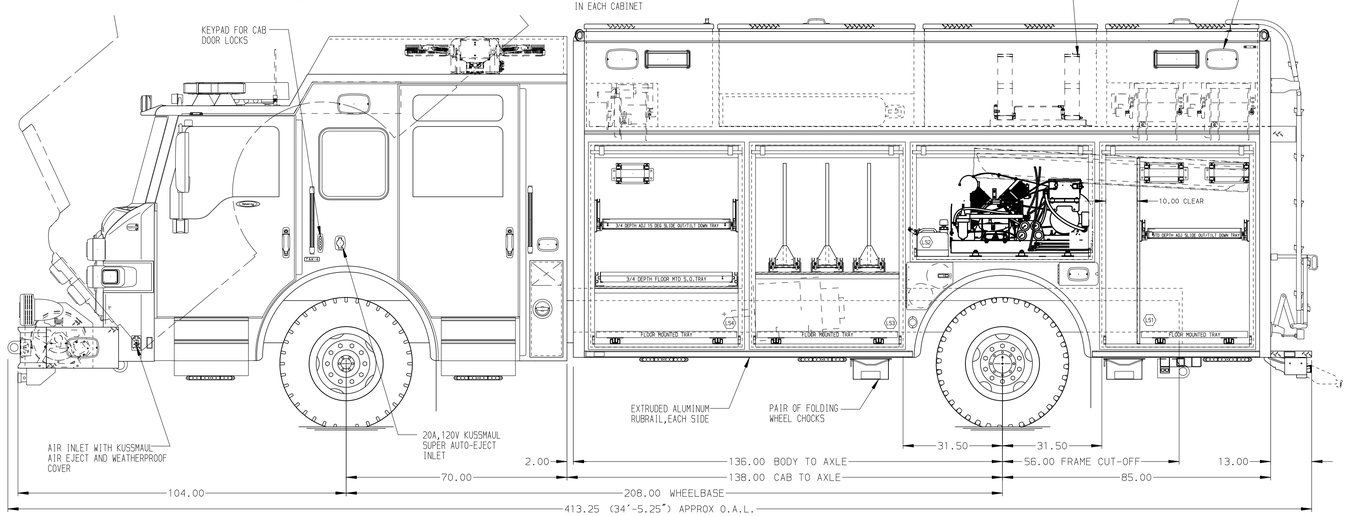

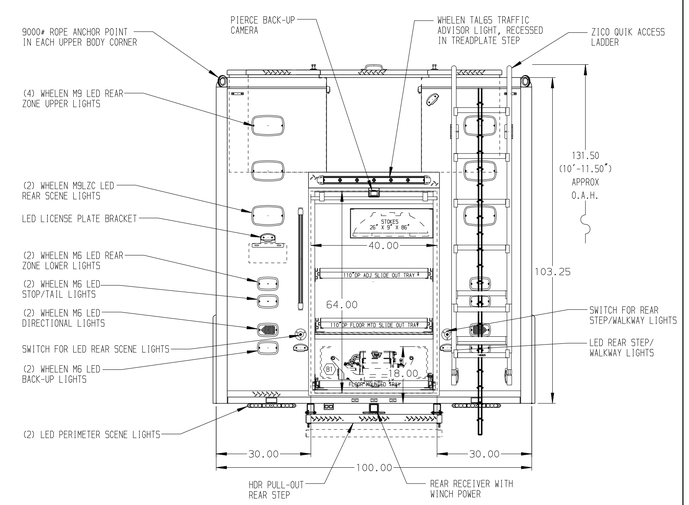

NOTE

DIMENSIONS SHOWN ARE APPROXIMATE AND ARE SUBJECT TO MINOR DEVIATIONS AS MAY OCCUR OR BE NECESSARY IN CONSTRUCTION.
MINOR DETAILS NOT SHOWN.

NOTES:
1. LIMA 40kW THREE PHASE GENERATOR WITH SPLASH GUARD LOCATED BETWEEN THE FRAME RAILS
2. ONSPOT AUTOMATIC TIRE CHAINS
3. POLISHED S/S SCUFFPLATES ON CAB AND CREW CAB DOOR JAMBS
4. ALUMINUM TREADPLATE ON RAISED ROOF OF CAB
5. FLOOR IN CAB AND CREW CAB TO BE PADDED RUBBER
6. IOTA 75 AMP BATTERY CHARGER LOCATED BEHIND THE DRIVER'S SEAT
7. BATTERY CHARGE INDICATOR LOCATED ON DRIVER'S SEAT WITH BRACKET
8. PULL STRAPS ON ALL BODY ROLL-UP DOORS
9. S/S "L"-SHAPED GUARD OVER ALL BODY ROLL-UP DOORS
10. PIERCE LED LIGHT STRIPS LOCATED IN ALL BODY AND HATCH COMPARTMENTS
11. 120 VAC FAN IN FORWARD HATCH COMPARTMENT FOR HYDRAULIC POWER UNITS
12. 15/20A,120V DUPLEX RECEPTACLE BEHIND DRIVER AND OFFICER'S SEATS
13. (2) 20A,240V T.L. RECEPACLES IN FORWARD HATCH COMPARTMENT FOR HYDRAULIC POWER UNITS

SIDE ROLL AND FRONTAL IMPACT PROTECTION

CLEAR DOOR WIDTH KEY	
ARMOR ROLL UP DOORS:	-2 1/4"
GORTITE ROLL UP DOORS:	-2 1/2"
PIERCE DOUBLE LAP DOORS:	-4 1/4"
PIERCE LIFT-UP LAP DOORS:	-1 1/2"
(EX: 60"F-F - 2 1/4"= 57 3/4" CLEAR) (F-F)= FRAME TO FRAME	

REV	DATE	BY	CH
1	22JUL19	DHE	AZU
2	03JUN19	ALZ	AZU
3	16APR19	DHE	AZU

CHASSIS DATA
MAKE: PIERCE
MODEL: VXFR7010
DWG NO.: 33529AD

Pierce MANUFACTURING INC.

TITLE: HEAVY DUTY RESCUE NON-WALKIN
FOR: FRANKLIN TOWNSHIP FIRE DISTRICT #2/LITTLE ROCK HILL FRANKLIN TOWNSHIP,NJ KEVIN DRISCOLL

JOB NO.	33529
SCALE	1:24
DATE	
DRAWN BY	DHE 13MAR19
CHECKED BY	AZU 15MAR19
SHEET SIZE	D
SHEET NO.	1 OF 1

View File Created 22-JUL-2019 11:12:56