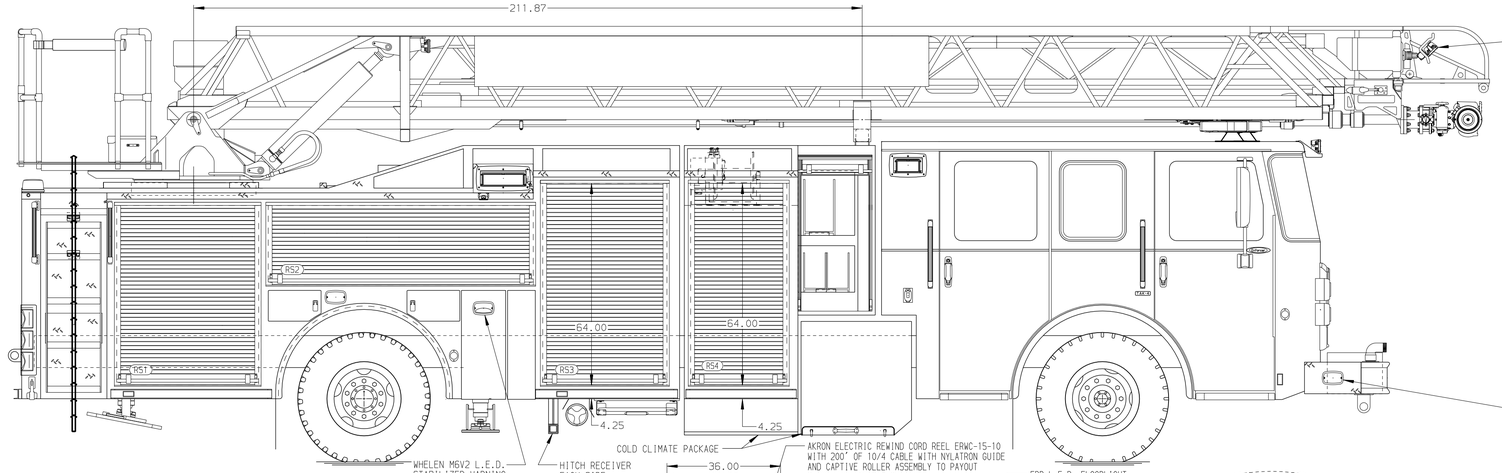

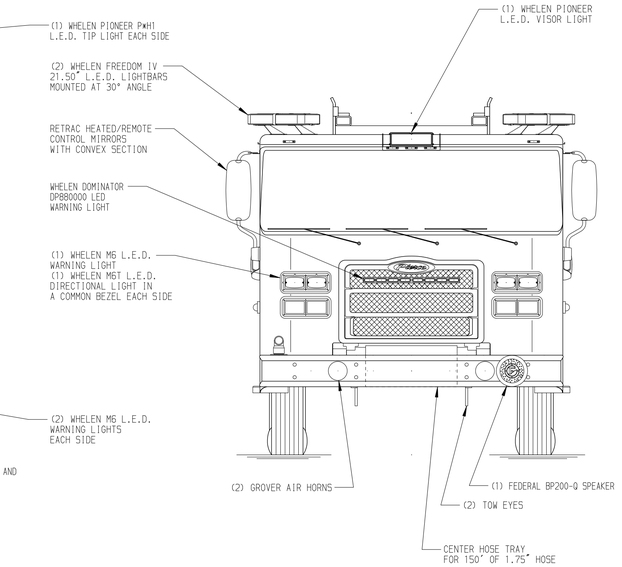

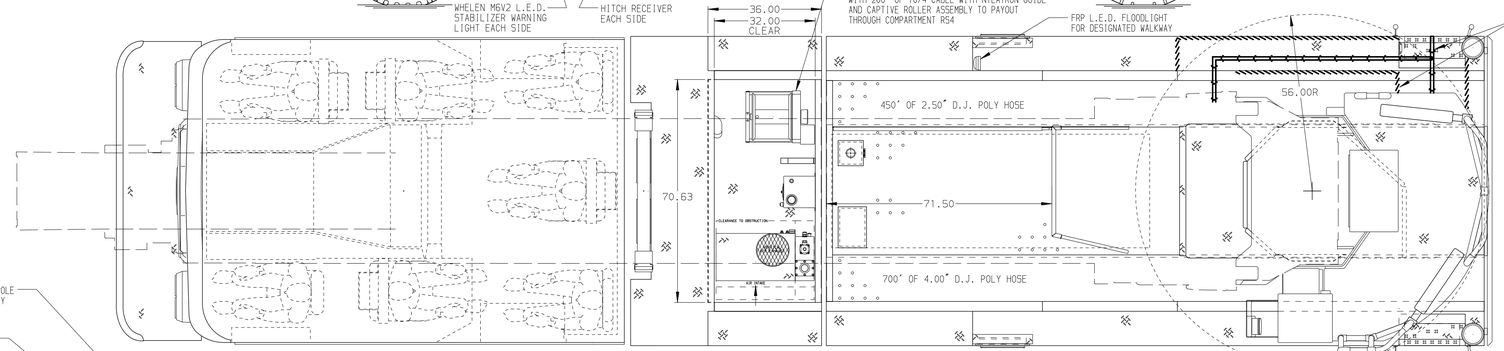

BODY	WATER TANK
107' ASL Aluminum Body PUC	500 Gallon Poly Water Tank
COMPT,LEFT SIDE FRONT	Foam System
Full Height Rollup Forward	Husky 12 Single Agent Foam System
COMPT,LEFT SIDE REAR	Foam Cell
Full Height Rollup Rearward	20 Gallon Foam Cell, Non-Reduced Water, PUC
COMPT,RIGHT SIDE FRONT	
Full Height Rollup Forward	
COMPT,RIGHT SIDE REAR	
Full Height Rollup Rearward	

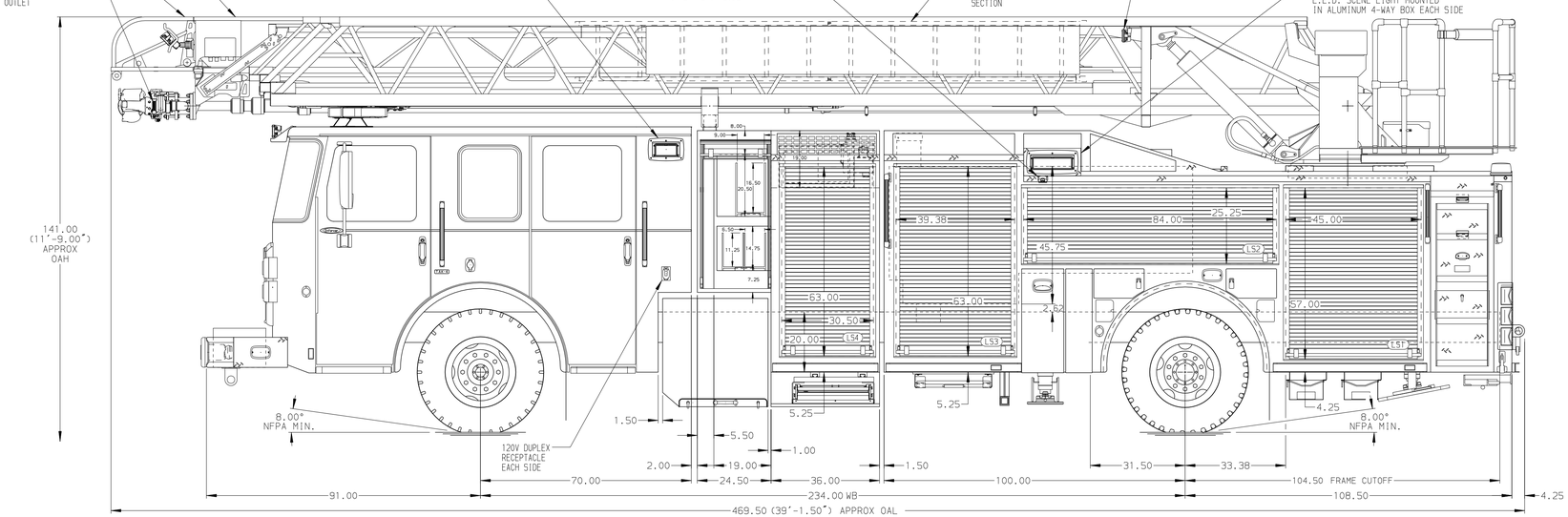

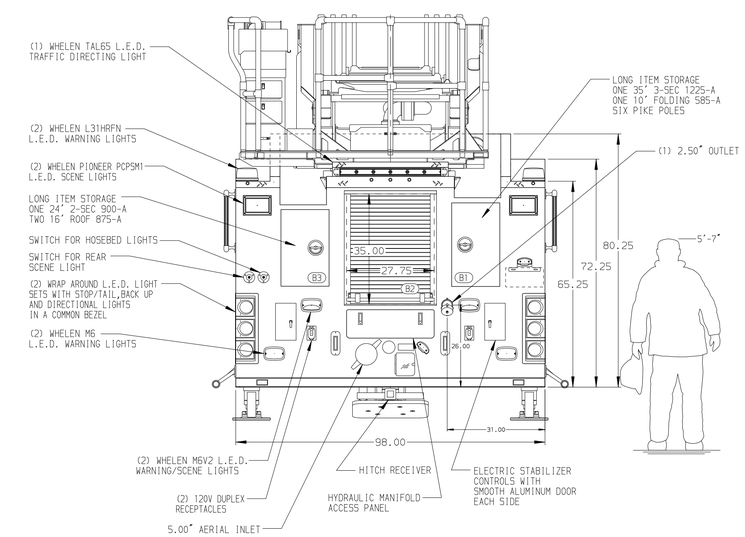

CHASSIS	CAB	AXLE,FRONT,CUSTOM	TRANSMISSION	PUMPHOUSE	CROSSLAYS,1.50"	SPEEDLAYS
Enforcer Chassis, PUC	7000 Enforcer Cab, PUC	22,800 Lb Dana Axle	Allison 5th Gen, 4500 EVS P	Control Zone, PAL/PAP PUC	(2) 1.50",Full Width Trays,150'	Speedlays Not Required
ENGINE	BUMPER	AXLE,REAR		PUMP	CROSSLAYS,2.50"	GENERATOR
470 HP DD13 Engine	22" Extended Stainless Steel	33,500 Lb Meritor Axle		1500 GPM Pierce PUC	(1) 2.50",Full Width Tray,200'	Harrison 6kW MSV Hydraulic

NOTE

DIMENSIONS SHOWN ARE APPROXIMATE AND ARE SUBJECT TO MINOR DEVIATIONS AS MAY OCCUR OR BE NECESSARY IN CONSTRUCTION.
MINOR DETAILS NOT SHOWN.

1. ONE 2.50 OUTLET WITH 2.50 PIPING AND SWIVEL LOCATED ON THE RIGHT SIDE OF THE FRONT BUMPER
2. SHORELINE RECEPTACLE WITH KUSSMAUL SUPER AUTO-EJECT LOCATED ON DRIVER SIDE OF THE CAB
3. AIR INLET WITH DISCONNECT COUPLING LOCATED ON THE DRIVER SIDE PUMP PANEL
4. BATTERY CHARGER LOCATED IN COMPARTMENT PER SHOP ORDER
5. BATTERY CHARGE INDICATOR LOCATED ON THE DRIVER SIDE SEAT RISER
6. NINE ADJUSTABLE SHELVES IN COMPARTMENTS PER SHOP ORDER
7. FOUR FLOOR MOUNTED SLIDE-OUT TRAYS IN COMPARTMENTS PER SHOP ORDER
8. ONE SWING-OUT ALUMINUM TOOLBOARD WITH PEGBOARD IN COMPARTMENT PER SHOP ORDER
9. ONE ADJUSTABLE TOOL BOARD MOUNTED TO SLIDE-OUT TRAY IN COMPARTMENT PER SHOP ORDER
10. THREE ZIAMATIC SCBA HOLDER BRACKETS IN COMPARTMENT PER SHOP ORDER
11. ONE VERTICAL PARTITION IN COMPARTMENT PER SHOP ORDER
12. ONE ALUMINUM PEGBOARD WITH TRACKS ON THE BACK WALL OF COMPARTMENT PER SHOP ORDER
13. THREE ALUMINUM PEGBOARD WITH TRACKS ON THE SIDE WALLS OF COMPARTMENTS PER SHOP ORDER
14. CIRCUIT BREAKER PANEL IN COMPARTMENT PER SHOP ORDER
15. TWO 120V RECEPTACLES LOCATED IN THE CAB PER SHOP ORDER
16. WIRELESS CAMERA LOCATED AT AERIAL EGRESS
17. NON-RAISED AERIAL PEDESTAL
18. 1500 GPM HIGH FLOW WATERWAY
19. WIRELESS CAMERA LOCATED AT AERIAL EGRESS
20. LIMITED RETRACTION NOT REQUIRED

REV	DATE	BY	CH
7	10JUN19	TKA	KBO
6	07MAY19	TKA	KBO
5	03APR19	TKA	KBO

CHASSIS DATA
MAKE: PIERCE
MODEL: ENFORCER

Pierce MANUFACTURING INC.

TITLE: 107' ASCENDANT AERIAL LADDER AND BODY ASSEMBLY
FOR: CHILLIWACK FIRE DEPARTMENT
DWG NO.: 33540AD

JOB NO.	33540
SCALE	1:24
DATE	
DRAWN BY	TKA 19FEB19
CHECKED BY	KBO 19FEB19
SHEET SIZE	D
SHEET NO.	1 OF 1

View File Created 11-JUN-2019 06:32:45