RIGHT SIDE COMPARTMENTS CONTAIN THE FOLLOWING:

COMPARTMENT RS1 CONTAINS:
- (2) STD DEPTH FLAT TOP FLOOR MTD TRAYS
- (1) 15A,120V 6-PLACE RECEPTACLE
- (1) CMW DUAL HYDRAULIC REEL WITH 100' OF HOSE EACH SIDE
- (2) STD DEPTH ADJ SHELF
- (1) STD DEPTH ADJ SLIDE OUT/TILT TRAY
- (1) SLIDE OUT ROLLER GUIDE BRACKET
-

COMPARTMENT RS2 CONTAINS:
- (1) ELECTRIC CORD REEL WITH 200' OF 10/4 YELLOW CORD
- (2) 15A,120V 6-PLACE RECEPTACLES
- (1) STD DEPTH ADJ SLIDE OUT/TILT TRAY

COMPARTMENT RS3 CONTAINS:
- (1) HORIZONTAL FLOOR EXTENSION
- (1) 1/2 DEPTH ADJ SLIDE OUT/TILT TRAY
- (2) STD DEPTH FLAT TOP FLOOR MTD TRAYS
- (1) ELECTRIC CORD REEL WITH 200' OF 10/4 YELLOW CORD
- (1) TOOL AIR REEL WITH 200' OF HOSE
- REGULATOR AND GAUGES FOR TOOL AIR
- (1) RACK FOR 9 AIR BAGS

COMPARTMENT RS4 CONTAINS:
- (1) HORIZONTAL FLOOR EXTENSION
- (1) 3/4 DEPTH FLOOR MTD SLIDE OUT TRAY WITH 2 TOOLBOARDS
- (2) POLY TOOL BOXES
-
-
-
-

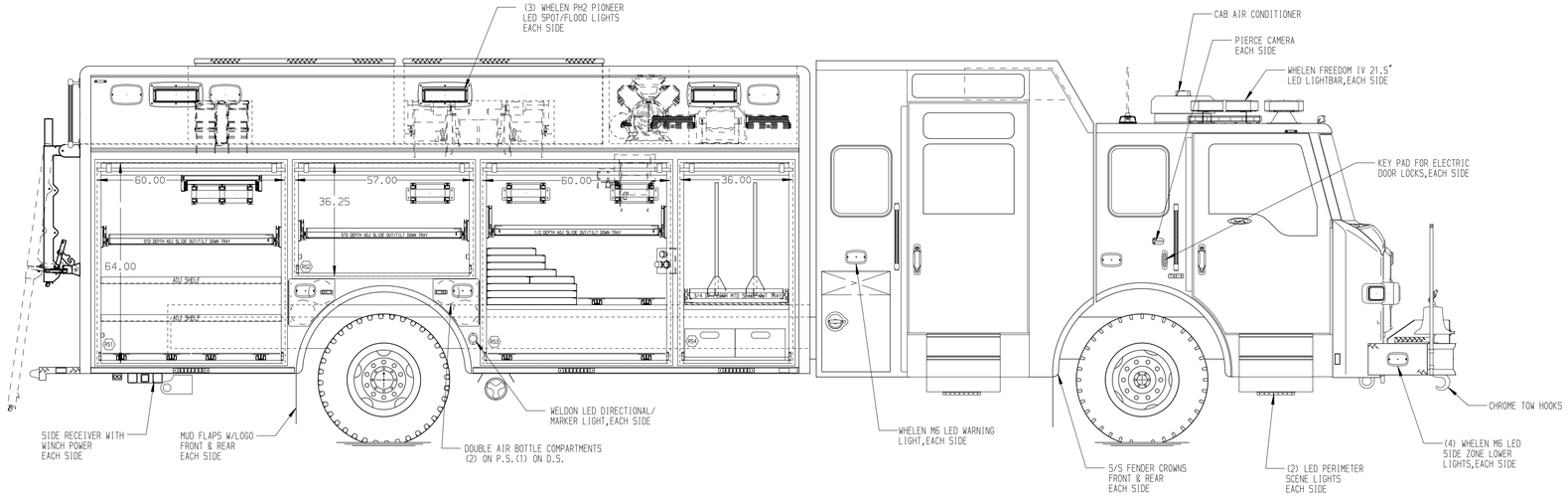

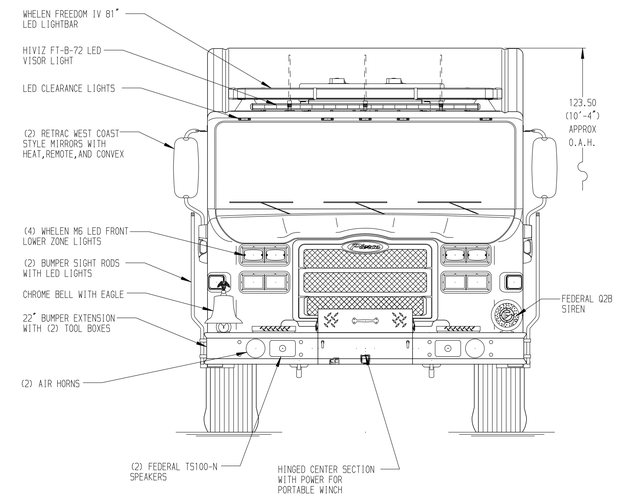

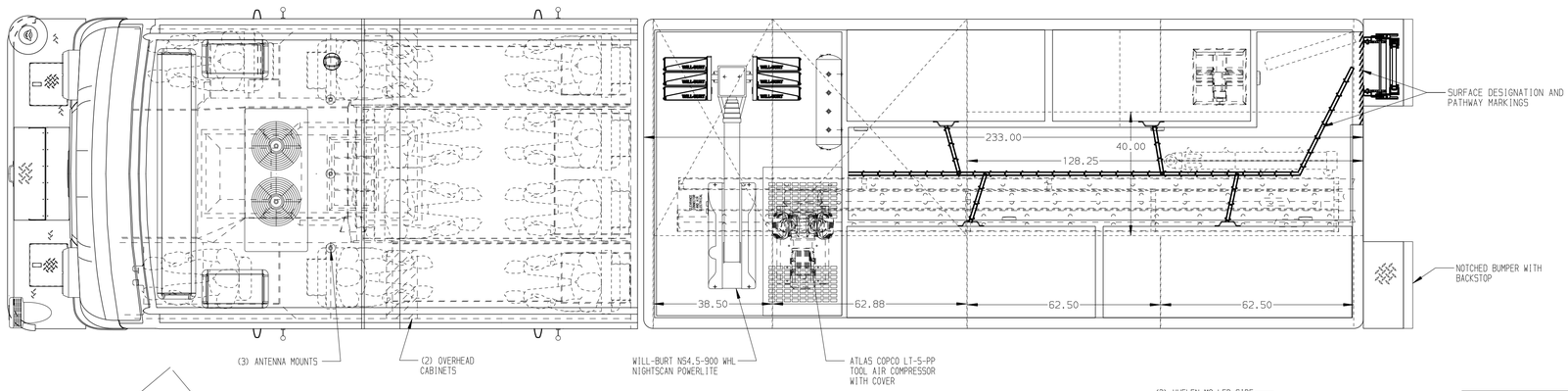

REAR COMPARTMENT CONTAINS THE FOLLOWING:

COMPARTMENT B1 CONTAINS:
- (1) HORIZONTAL FLOOR EXTENSION
- (1) 122"DP FLOOR MTD SLIDE OUT TRAY WITH TOOLBOARD
- (2) POLY TOOL BOXES
- (1) RACK FOR THE FOLLOWING:
  - (1) 30' 2-SECTION LADDER
  - (1) 24' 2-SECTION LADDER
  - (1) 18' ROOF LADDER
  - (1) 10' FOLDING LADDER
  - (1) LITTLE GIANT LADDER
  - (6) PIKE POLES
-
-
-

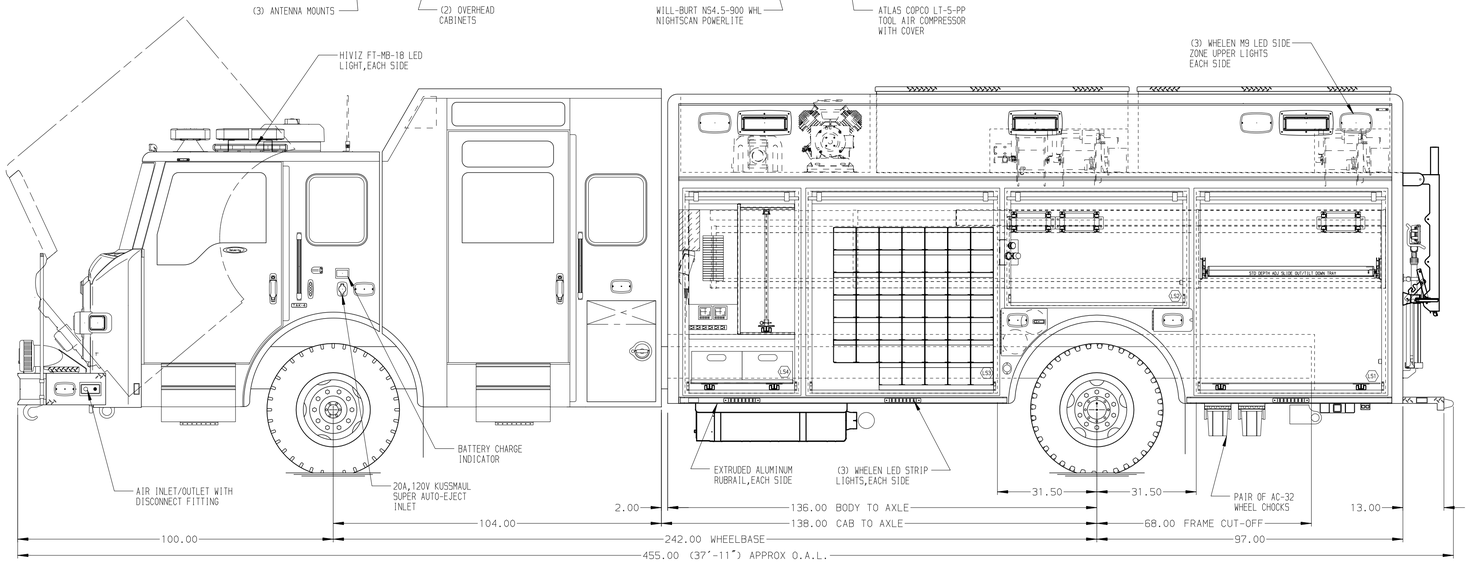

LEFT SIDE COMPARTMENTS CONTAIN THE FOLLOWING:

COMPARTMENT LS1 CONTAINS:
- (1) STD DEPTH ADJ SLIDE OUT/TILT TRAY
- (1) STD DEPTH FLAT TOP FLOOR MTD TRAY
- (1) ELECTRIC CORD REEL WITH 200' OF 10/4 YELLOW CORD
- (1) 15A,120V 6-PLACE RECEPTACLE
-
-

COMPARTMENT LS2 CONTAINS:
- (1) ELECTRIC CORD REEL WITH 200' OF 10/4 YELLOW CORD
- (1) 15A,120V 6-PLACE RECEPTACLE
- (1) TOOL AIR REEL WITH 200' OF HOSE
- REGULATOR AND GAUGES FOR TOOL AIR
-

COMPARTMENT LS3 CONTAINS:
- (1) RACK FOR 47 SCBA BOTTLES
- (1) REAR WALL COMPARTMENT DIVIDER
-
-
-

COMPARTMENT LS4 CONTAINS:
- (1) REAR WALL COMPARTMENT DIVIDER
- (1) VERTICAL COMPARTMENT DIVIDER
- (1) HORIZONTAL FLOOR EXTENSION
- (1) STD DEPTH FLAT TOP FLOOR MTD TRAY
- (1) STD DEPTH SLIDE OUT TOOLBOARD
- (2) POLY TOOL BOXES
- (1) CIRCUIT BREAKER PANEL
- (1) GENERATOR METER PANEL
- (1) COMPRESSOR CONTROL PANEL
- (1) 15A,120V 6-PLACE RECEPTACLE
-
-

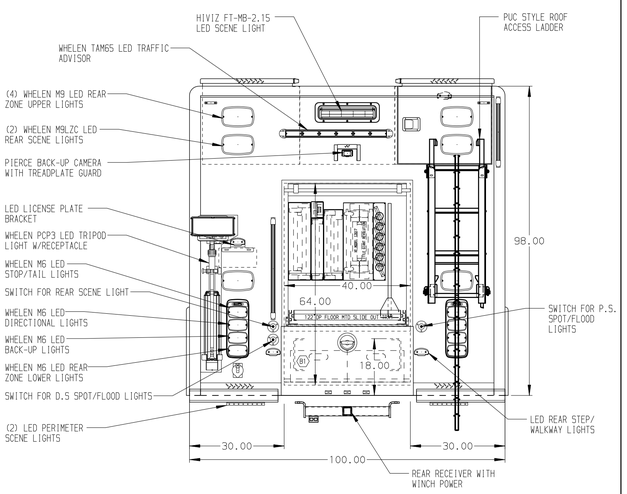

NOTE

DIMENSIONS SHOWN ARE APPROXIMATE AND ARE SUBJECT TO MINOR DEVIATIONS AS MAY OCCUR OR BE NECESSARY IN CONSTRUCTION.
MINOR DETAILS NOT SHOWN.

NOTES:
1. KUSSMAUL AIR COMPRESSOR LOCATED BEHIND THE DRIVER'S SEAT
2. WARN #9,000 PORTABLE RECEIVER STYLE WINCH
3. FLOOR IN CAB AND CREW CAB TO BE PADDED RUBBER
4. KUSSMAUL 1200 CHARGER LOCATED BEHIND THE DRIVER'S SEAT
5. S/S GUARDS OVER ALL BODY ROLL-UP DOORS
6. KEYED LOCKS ON ALL BODY ROLL-UP DOORS
7. PIERCE DUAL LED LIGHTS IN ALL BODY AND HATCH COMPARTMENTS
8. ONAN 35kW SINGLE PHASE PTO DRIVEN GENERATOR LOCATED BETWEEN THE FRAME RAILS
9. POLISHED S/S SCUFFPLATES ON CAB AND CREW CAB DOOR JAMBS

MAXIMUM O.A.H. 10'-5"

MAXIMUM O.A.L. 37'-11"

SIDE ROLL AND FRONTAL IMPACT PROTECTION

CLEAR DOOR WIDTH KEY

AMDOR ROLL UP DOORS:	-2 1/4"
GORTITE ROLL UP DOORS:	-2 1/2"
PIERCE DOUBLE LAP DOORS:	-4 1/4"
PIERCE LIFT-UP LAP DOORS:	-1 1/2"

(EX: 60"F-F - 2 1/4"= 57 3/4" CLEAR)
(F-F)= FRAME TO FRAME

REV	DATE	BY	CH
2	12AUG19	DHE	CDK
1	10JUL19	DHE	CDK
0	08MAY19	DHE	CDK

CHASSIS DATA
MAKE: PIERCE
MODEL: VXFR10420
DWG NO.: 33667AD

Pierce MANUFACTURING INC.

TITLE: HEAVY DUTY RESCUE NON-WALKIN
FOR: EAST MEADOW FIRE DISTRICT EAST MEADOW,NY

JOB NO.	33667
SCALE	1:24
DATE	
DRAWN BY	DHE 09APR19
CHECKED BY	CDK 30APR19
SHEET SIZE	D
SHEET NO.	1 OF 1

View File Created 12-AUG-2019 14:28:36