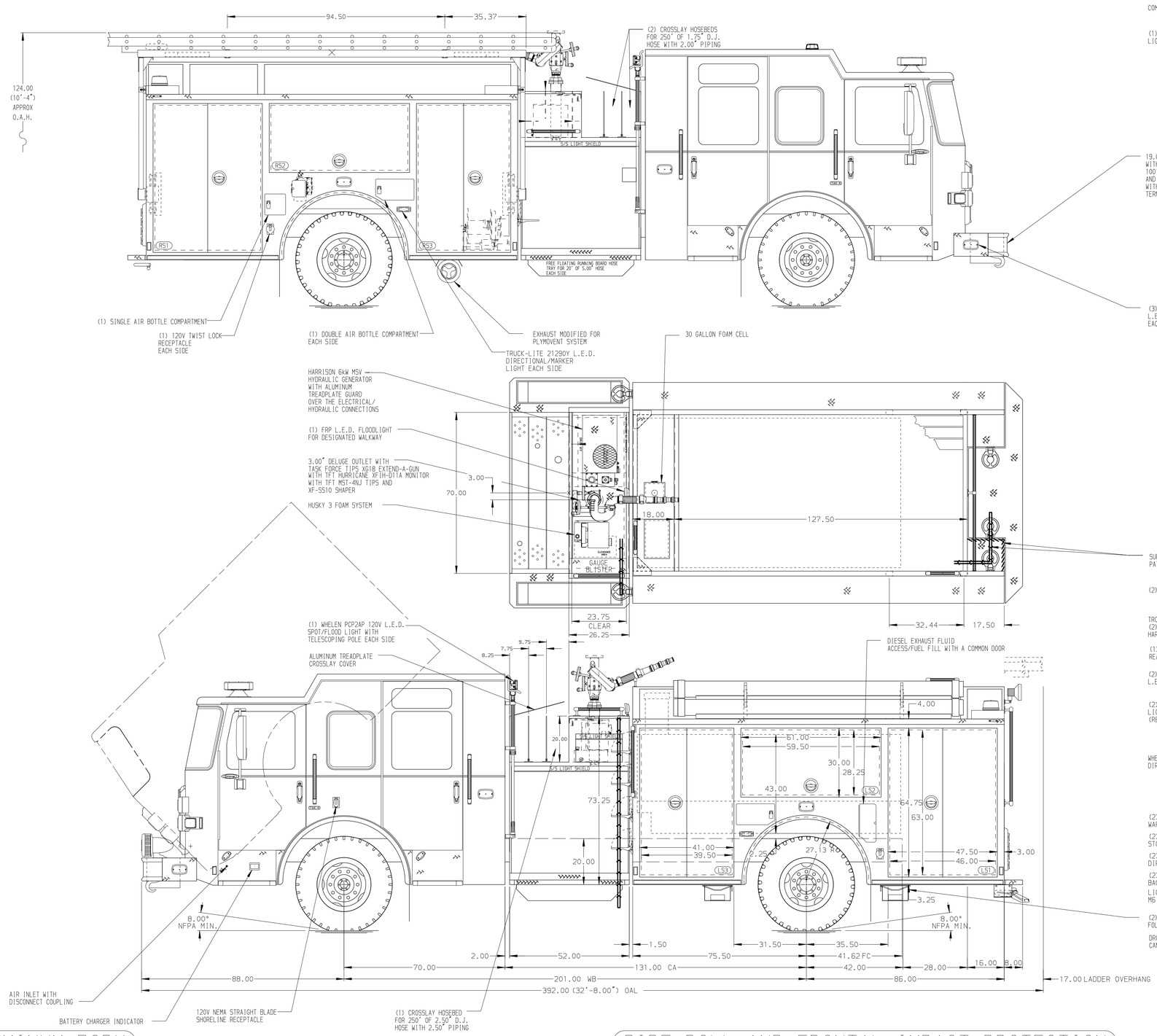

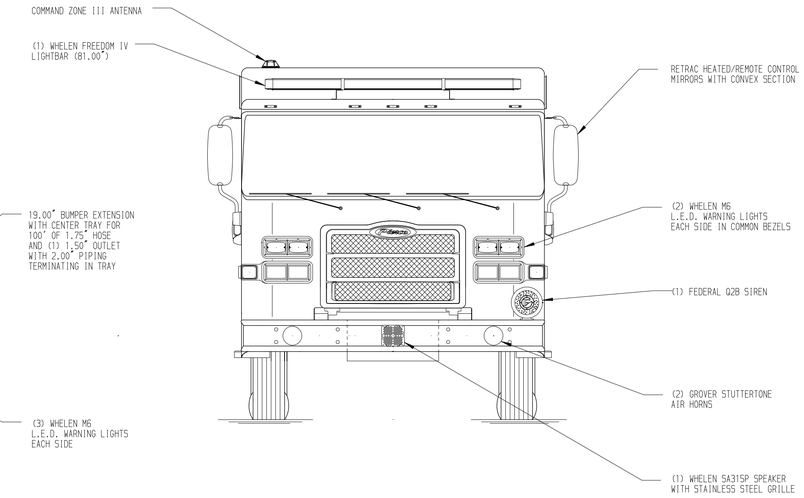

HOSEBED CAPACITIES

1. 1200' OF 5.00" D.J. HOSE
2. 500' OF 2.50" D.J. HOSE
3. 250' OF 1.75" D.J. HOSE

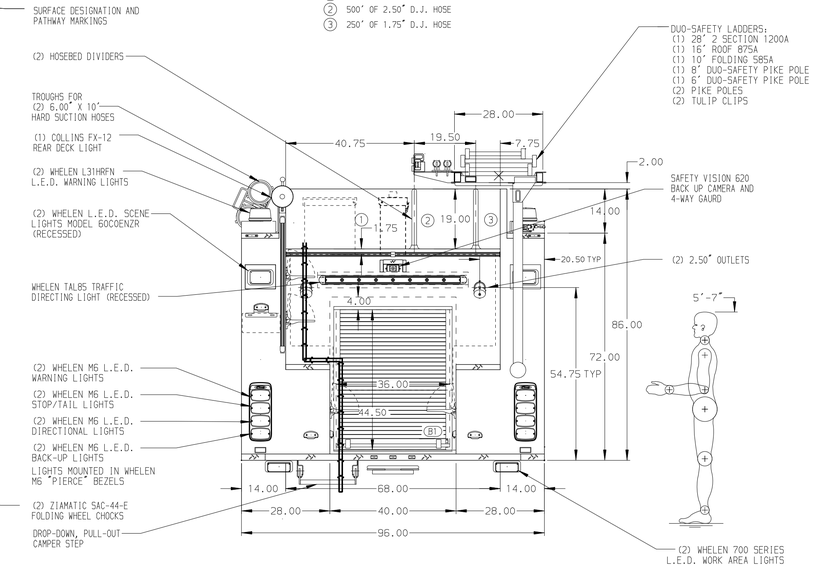

ALUMINUM BODY

SIDE ROLL AND FRONTAL IMPACT PROTECTION

NOTE

DIMENSIONS SHOWN ARE APPROXIMATE AND ARE SUBJECT TO MINOR DEVIATIONS AS MAY OCCUR OR BE NECESSARY IN CONSTRUCTION.
MINOR DETAILS NOT SHOWN.

1. INSTA-CHAIN AUTOMATIC TIRE CHAINS TO BE PROVIDED AT REAR
2. ONE ADJUSTABLE SLIDE-OUT TRAY IN COMPARTMENT LS1, LS3, AND B1
3. SWING OUT TOOL BOARD WITH PEGBOARD PATTERN IN COMPARTMENT LS2
4. CIRCUIT BREAKER PANEL IN COMPARTMENT LS3
5. BATTERY CHARGER BEHIND DRIVER'S SEAT
6. FULL WIDTH/DEPTH SHELVES TWO IN COMPARTMENT LS1 AND ONE IN COMPARTMENT LS3, B1, RS1, RS2, AND RS3
7. ONE VERTICAL PARTITION IN RS1 AND RS2
8. ONE HANNAY MODEL E1618-17-18 ELECTRIC REWIND CORD REEL WITH 200' OF 10/3 CABLE IN RS3

REV	DATE	BY	CH
7	07AUG19	LST	DTS
6	09JUL19	LST	DTS
5	13JUN19	KLE	KWI

CHASSIS DATA
MAKE: PIERCE
MODEL: ENFORCER

Pierce MANUFACTURING INC.

TITLE: 1250-D-1030P, 1000 GAL OF WATER W/ 30 GAL FOAM CELL 161" FH FDLER, HYDRAULIC LADDER RACK, (3) CROSSLAYS
FOR: TOWN OF FARMINGTON FARMINGTON, CONNECTICUT
DWG NO.: 33799AD

JOB NO.	33799
SCALE 1:24	DATE
DRAWN BY LST	18APR19
CHECKED BY KOU	18APR19
SHEET SIZE D	SHEET NO. 1 OF 1

View File Created 07-AUG-2019 14:49:37