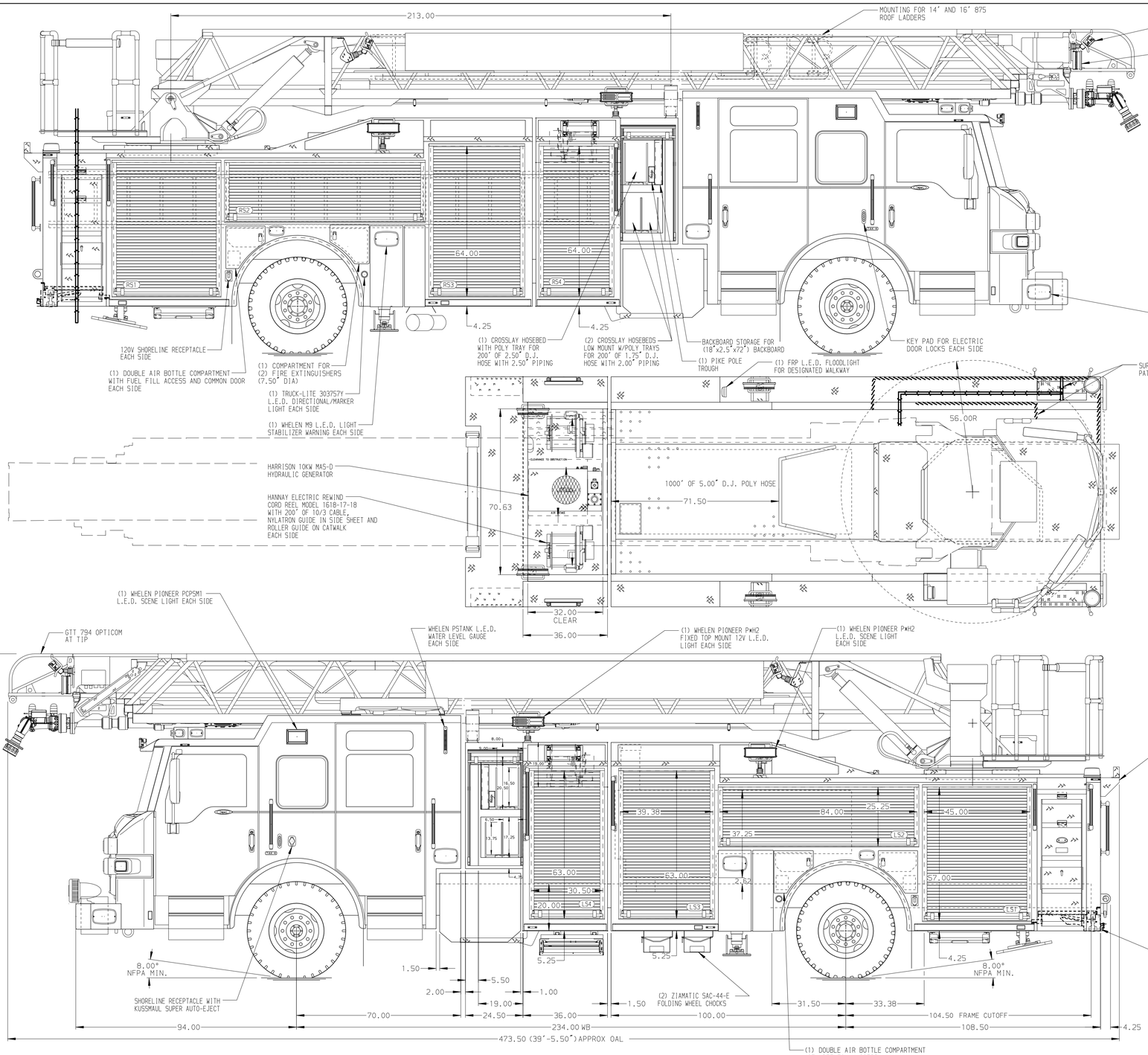

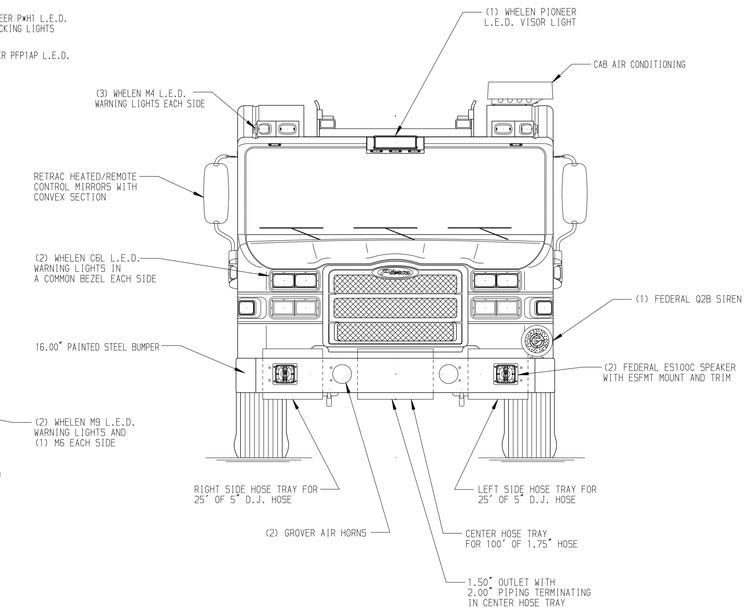

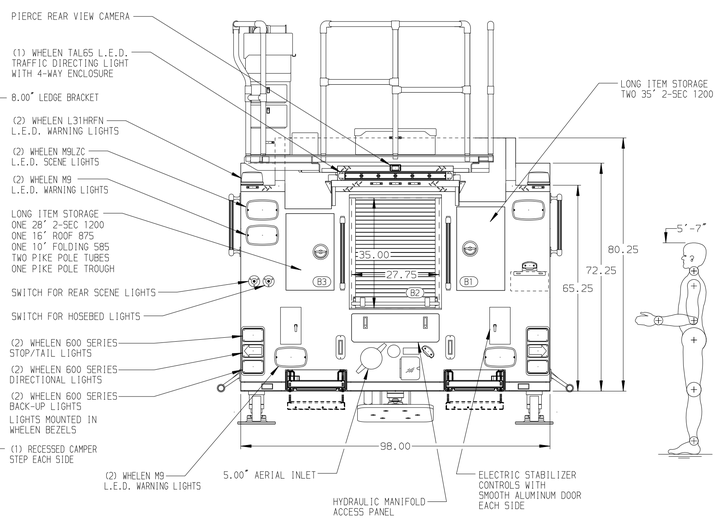

ALUMINUM BODY

FRONTAL IMPACT PROTECTION

NOTE

DIMENSIONS SHOWN ARE APPROXIMATE AND ARE SUBJECT TO MINOR DEVIATIONS AS MAY OCCUR OR BE NECESSARY IN CONSTRUCTION.
MINOR DETAILS NOT SHOWN.

1. AIR INLET WITH DISCONNECT COUPLING LOCATED ON THE DRIVER SIDE PUMP PANEL
2. DUAL L.E.D. LIGHT STRIPS LOCATED IN HOSE BED
3. BATTERY CHARGER LOCATED IN COMPARTMENT PER SHOP ORDER
4. BATTERY CHARGE INDICATOR LOCATED NEAR DRIVER SEAT RISER WITH BRACKET
5. TEN ADJUSTABLE SHELVES IN COMPARTMENTS PER SHOP ORDER
6. ONE FLOOR MOUNTED SLIDE-OUT TRAY IN COMPARTMENT PER SHOP ORDER
7. EIGHT ELASTIC PULL STRAPS FOR DOOR ON COMPARTMENTS PER SHOP ORDER
8. ONE SWING-OUT ALUMINUM TOOL BOARD IN COMPARTMENT PER SHOP ORDER
9. TWO VERTICAL PARTITION (SPECIAL HEIGHT) IN COMPARTMENTS PER SHOP ORDER
10. NON-RAISED AERIAL PEDESTAL
11. 1500 GPM HIGH FLOW WATERWAY
12. CIRCUIT BREAKER PANEL IN COMPARTMENT PER SHOP ORDER
13. REMOTE LADDER CONTROLS AT AERIAL TIP
14. L.E.D. LIGHTING ON AERIAL LADDER SECTIONS
15. 120V POWER TO AERIAL TIP
16. FIRE RESEARCH 3-WAY INTERCOM SYSTEM BETWEEN AERIAL TIP,PUMP PANEL & TURNTABLE
17. LIFTING EYE ROPE RESCUE ATTACHMENT AT AERIAL TIP
18. TRIDENT FOLDING STEPS ON AERIAL DEVICE

REV	DATE	BY	CH
7	08JUL19	SVA	JJR
6	12JUN19	TKA	JJR
5	11JUN19	TKA	JJR
4	25APR19	SVA	JBL

CHASSIS DATA
MAKE: PIERCE
MODEL: IMPEL

Pierce MANUFACTURING INC.

TITLE: 107' ASCENDANT AERIAL LADDER AND BODY ASSEMBLY 420 GALLON WATERTANK-400 WATER/20 FOAM
FOR: CLARK COUNTY FIRE DEPARTMENT LAS VEGAS, NV
DWG NO.: 33856AD

JOB NO.	33856
SCALE 1:24	DATE
DRAWN BY SVA	15APR19
CHECKED BY JBL	19APR19
SHEET SIZE D	SHEET NO. 1 OF 1

View File Created 08-JUL-2019 14:23:54