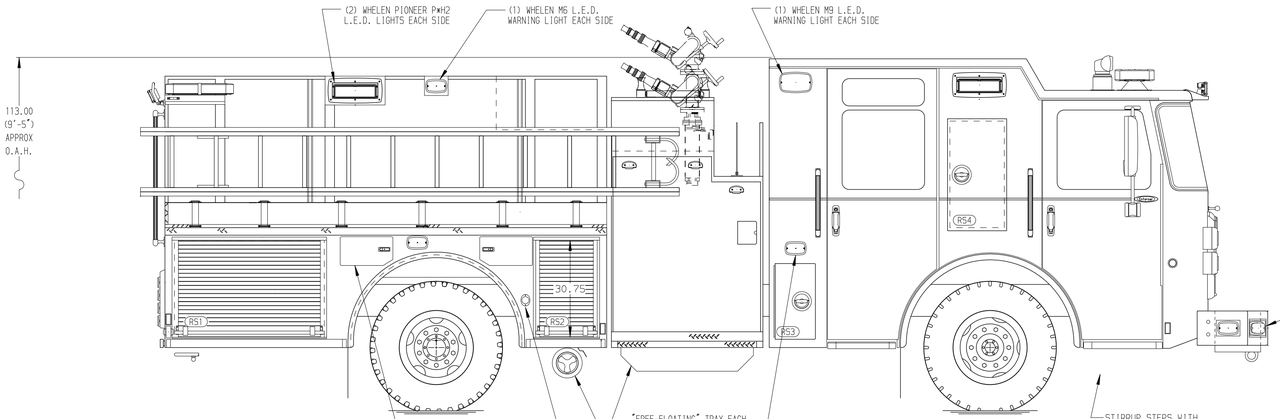

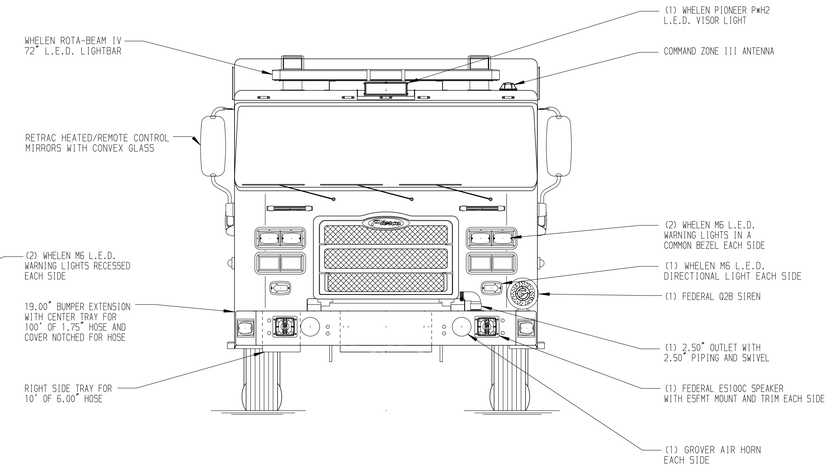

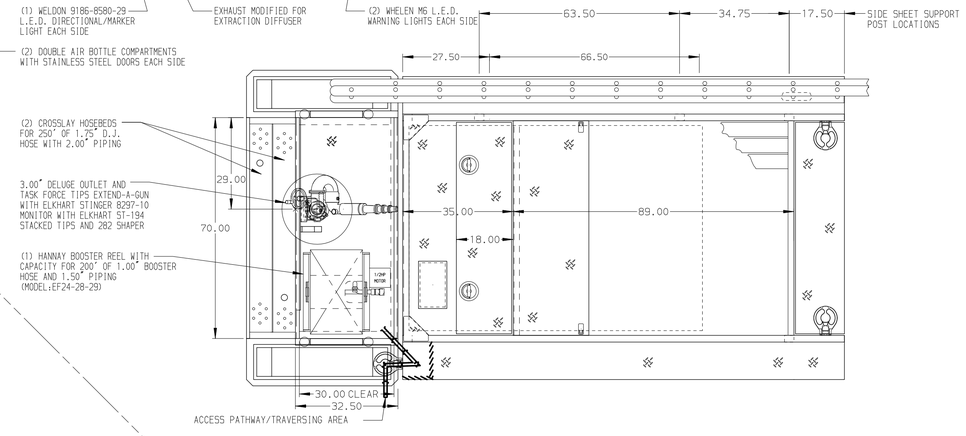

HOSEBED CAPACITIES

1 - 300' OF 1.75" HOSE
2 - 200' OF 2.50" HOSE
3 - 300' OF 3.00" HOSE
4 - 1200' OF 5.00" HOSE

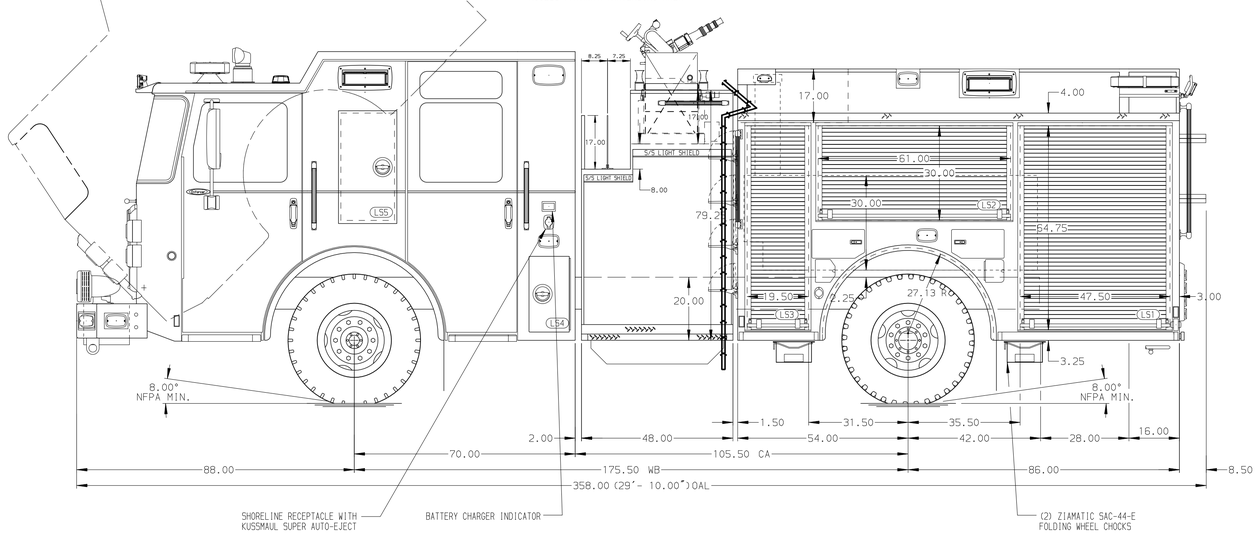

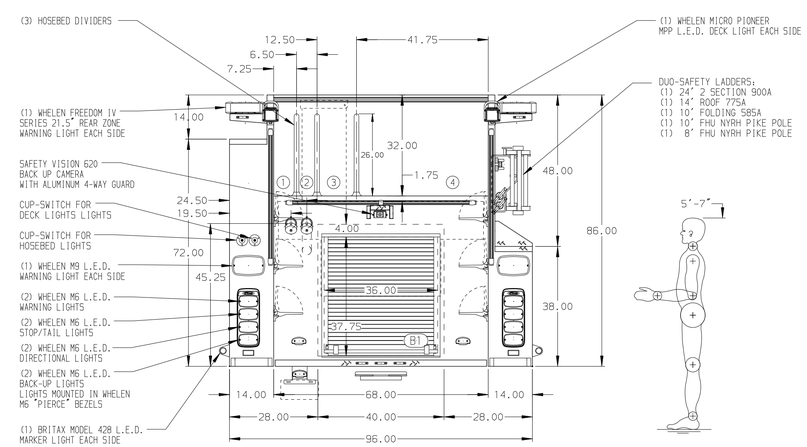

ALUMINUM BODY

MAXIMUM O.A.H. 113"

SIDE ROLL AND FRONTAL IMPACT PROTECTION

NOTE

DIMENSIONS SHOWN ARE APPROXIMATE AND ARE SUBJECT TO MINOR DEVIATIONS AS MAY OCCUR OR BE NECESSARY IN CONSTRUCTION.
MINOR DETAILS NOT SHOWN.

1. AIR INLET WITH DISCONNECT COUPLING LOCATED IN DRIVER'S SIDE STEP WELL
2. ONSPOT AUTOMATIC TIRE CHAINS TO BE PROVIDED AT REAR
3. VOGEL LUBE SYSTEM PUMP LOCATED PER SHOP ORDER
4. BATTERY CHARGER LOCATED BEHIND DRIVER'S SEAT
5. DUAL L.E.D. LIGHT STRIPS LOCATED IN HOSE BED
6. ONE ADJUSTABLE FULL WIDTH/DEPTH SHELF IN COMPARTMENT LS2, LS3, RS1 & B1, TWO IN LS1
7. ONE FLOOR MOUNTED SLIDE-OUT TRAY IN COMPARTMENT LS3
8. ONE SMOOTH ALUMINUM TOOLBOARD W/TRACK ON REAR WALL OF COMPARTMENT LS3
9. ONE SMOOTH ALUMINUM TOOLBOARD WITH NO HOLES ADDED TO SLIDE-OUT TRAY IN COMPARTMENT LS3
10. ONE ALUMINUM TOOLBOARD W/TRACK ON BACK WALL OF COMPARTMENT RS2

REV	DATE	BY	CH
3	21AUG19	AMI	JJR
2	17JUL19	AMI	JJR
1	11JUN19	AMI	JJR

CHASSIS DATA
MAKE: PIERCE
MODEL: ENFORCER

Pierce MANUFACTURING INC.

TITLE: 2000-D-500P 140" PUMPER BODY, (2)CROSSLAYS, DELUGE BOOSTER REEL, LADDERS ON PASSENGERS SIDE SHEET

FOR: UNIFIED GOVERNMENT OF WYANDOTTE COUNTY KANSAS CITY, KANSAS

DWG NO.: 33883AD

JOB NO.	SCALE	DRAWN BY	CHECKED BY	SHEET SIZE	SHEET NO.
33883 (01-03)	1:24	AMI	SMA	D	1 OF 1
	DATE	02MAY19	03MAY19		

View File Created 21-AUG-2019 13:35:28