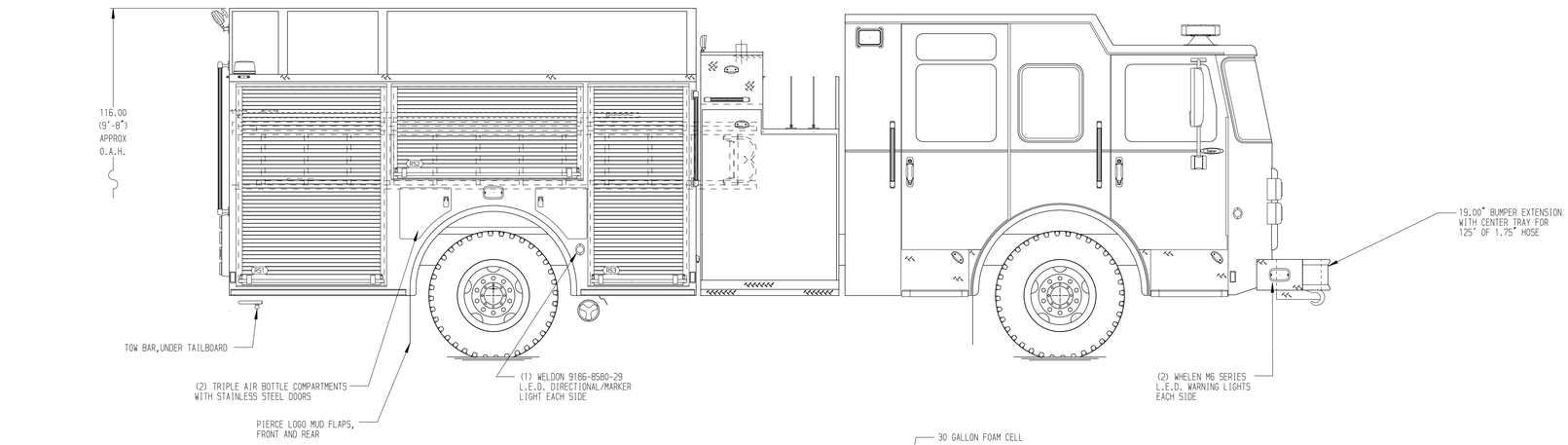

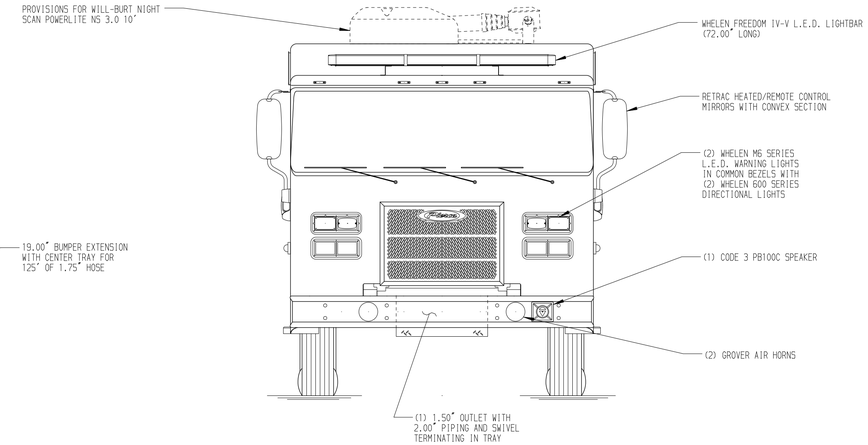

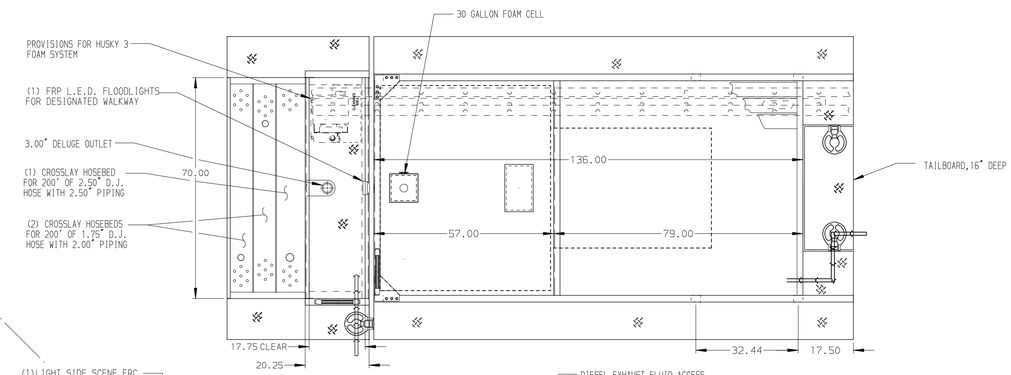

HOSEBED CAPACITIES

1. 500' OF 2.50" D.J.POLY HOSE
2. 1000' OF 5.00" D.J.POLY HOSE
3. 500' OF 2.50" D.J.POLY HOSE

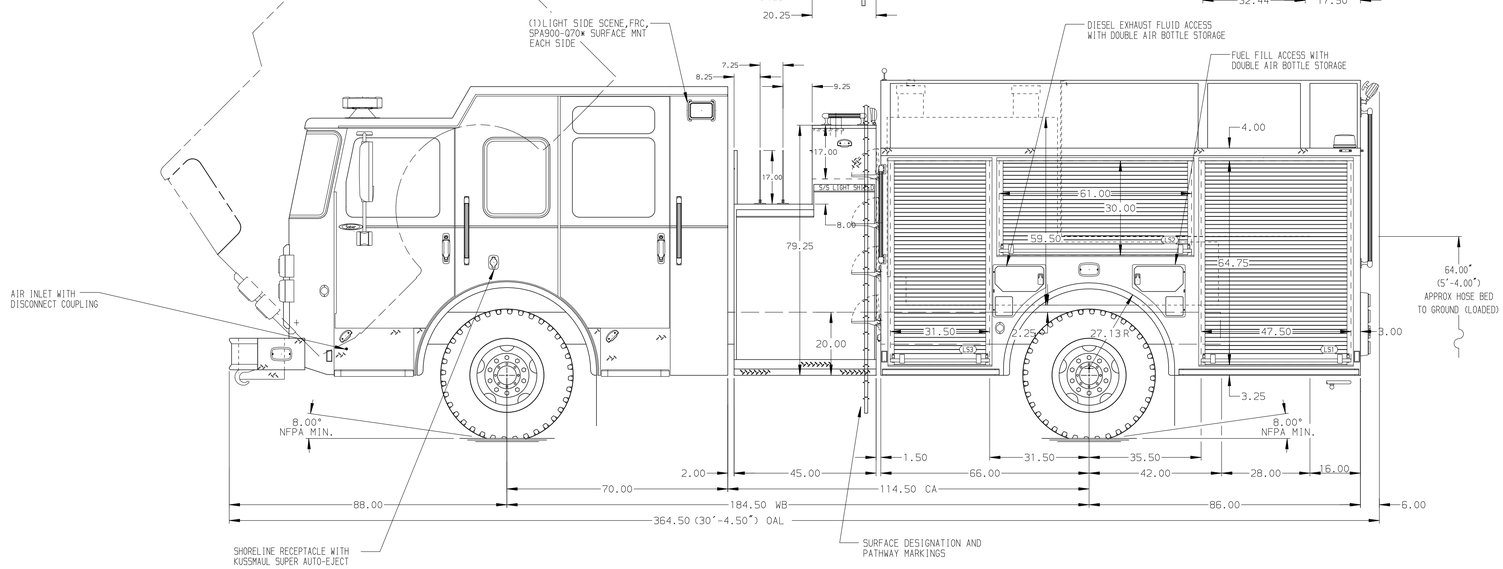

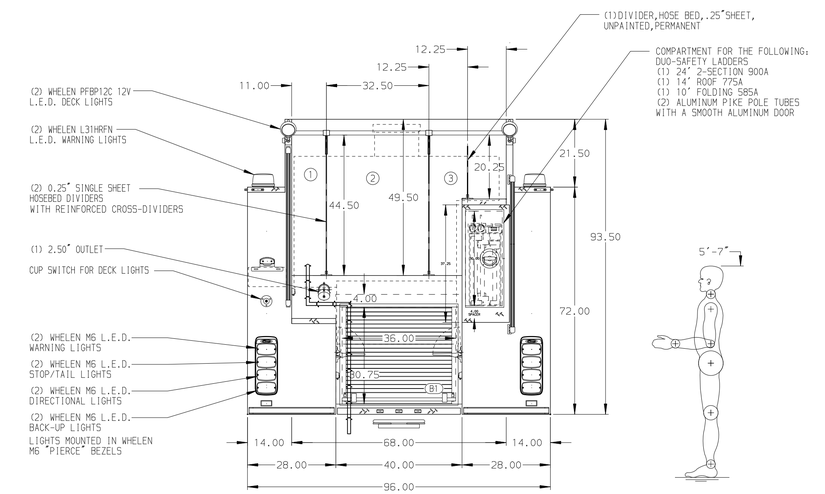

ALUMINUM BODY

NOTE

DIMENSIONS SHOWN ARE APPROXIMATE AND ARE SUBJECT TO MINOR DEVIATIONS AS MAY OCCUR OR BE NECESSARY IN CONSTRUCTION.
MINOR DETAILS NOT SHOWN.

REV	DATE	BY	CH
B	12JUN19	KLE	KWI
A	29MAY19	JLA	CAG

CHASSIS DATA — MAKE: PIERCE — MODEL: SABER FR

Pierce MANUFACTURING INC.
BRADENTON, FLORIDA

TITLE: 1250-D-720P,W/30 GAL FOAM,152"NEW YORK STYLE PUMPER (3)CROSSLAYS, 45"SIDE CONTROL, DELUGE

FOR: PIERCE FIELD UNIT, BRADENTON, FLORIDA

DWG NO.: 33963AD

JOB NO.	SCALE	DRAWN BY	CHECKED BY	SHEET SIZE	SHEET NO.
33963	1:24	JLA	CAG	D	1 OF 1

DATE: 18APR19 (DRAWN BY) — 18APR19 (CHECKED BY)

View File Created 13-JUN-2019 08:02:38