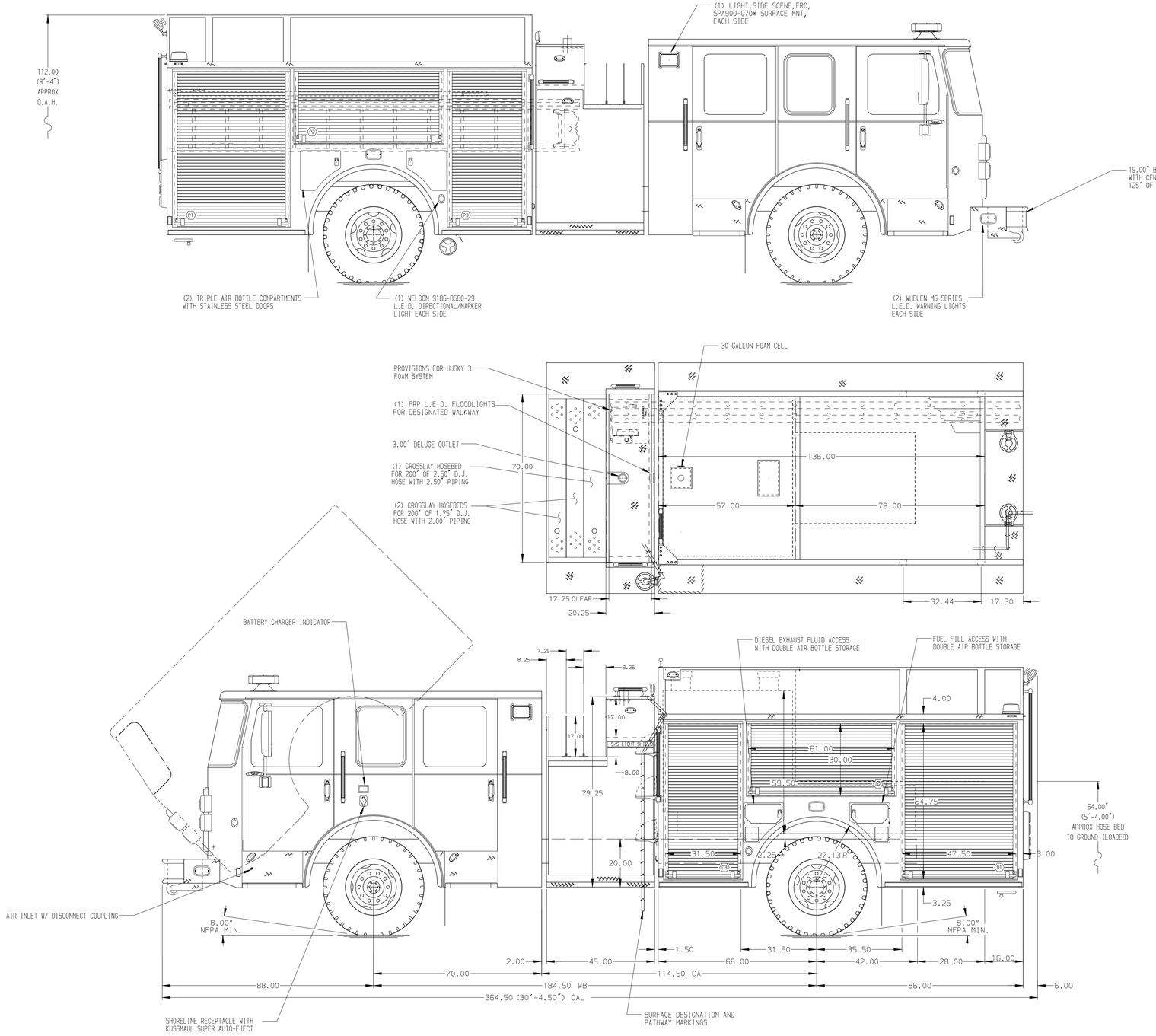

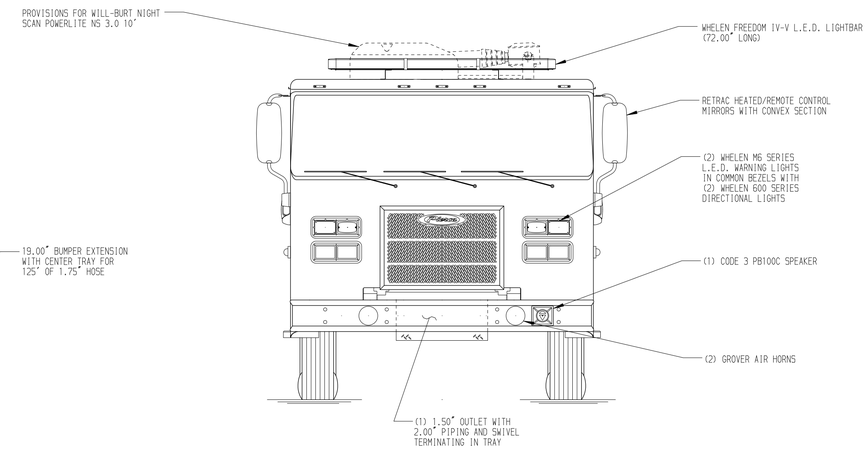

HOSEBED CAPACITIES

1. 1000' OF 5.00" D.J.POLY HOSE
2. 500' OF 2.50" D.J.POLY HOSE

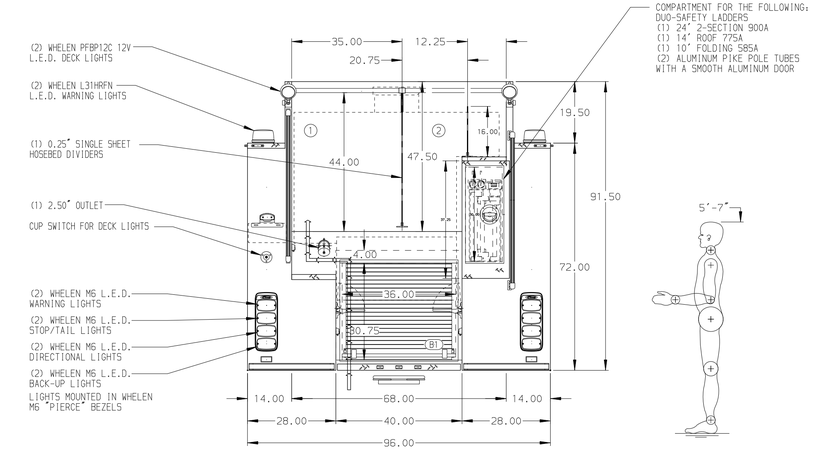

ALUMINUM BODY

NOTE

DIMENSIONS SHOWN ARE APPROXIMATE AND ARE SUBJECT TO MINOR DEVIATIONS AS MAY OCCUR OR BE NECESSARY IN CONSTRUCTION.
MINOR DETAILS NOT SHOWN.

REV	DATE	BY	CH
B	17JUN19	CRH	CAG
A	12JUN19	KLE	KWI

CHASSIS DATA
MAKE: PIERCE
MODEL: SABER FR

Pierce MANUFACTURING INC.
BRADENTON, FLORIDA

TITLE: 1500-D-720P,W/30 GAL FOAM,152"NEW YORK STYLE PUMPER (2) CROSSLAYS, 45" PUMPHOUSE, DELUGE

FOR: PIERCE FIELD UNIT, BRADENTON, FLORIDA

DWG NO.: 33978AD

JOB NO.	33978
SCALE	1:24
DATE	
DRAWN BY	JLA
DATE	23APR19
CHECKED BY	CAG
DATE	23APR19
SHEET SIZE	D
SHEET NO.	1 OF 1

View File Created 18-JUN-2019 07:16:40