Pumper, PUC

BODY
Pumper, PUC, Aluminum

CHASSIS
Enforcer Chassis, PUC

CHASSIS

AXLE, FRONT, CUSTOM
19,500 Lb TAK-4 Axle

AXLE, REAR
30,000 Lb Dana Axle

ENGINE
505 HP DD13 Engine

TRANSMISSION
Allison 5th Gen, 4000 EVS P

BUMPER
26" Underslung, 12" High Painted Steel

CAB
7010 Enforcer Cab, PUC

BODY

WATER TANK
1000 Gallon Poly Water Tank

COMPT, PUMPER, REAR
33.50" FF Rollup Rear Compt w/Tailboard, PUC

COMPT, PUMPER, LEFT SIDE
189" Rollup Full Height & Depth Front & Rear, PUC

COMPT, PUMPER, RIGHT SIDE
189" Rollup Full Height & Depth Front & Rear, PUC

FIRE SUPPRESSION

PUMPHOUSE
Control Zone, PUC

PUMP
1500 GPM Pierce PUC

CROSSLAYS, 1.50"
(2) 1.50", Poly Trays, 200'

CROSSLAYS, 2.50"
(1) 2.50", Poly Tray, 200'

GENERATOR
Harrison 6kW MCR Hydraulic Generator

Foam System
Husky 3 Single Agent Foam System

Foam Cell
20 Gallon Foam Cell, Not Reduced Water, PUC

Side Roll and Frontal Impact Protection

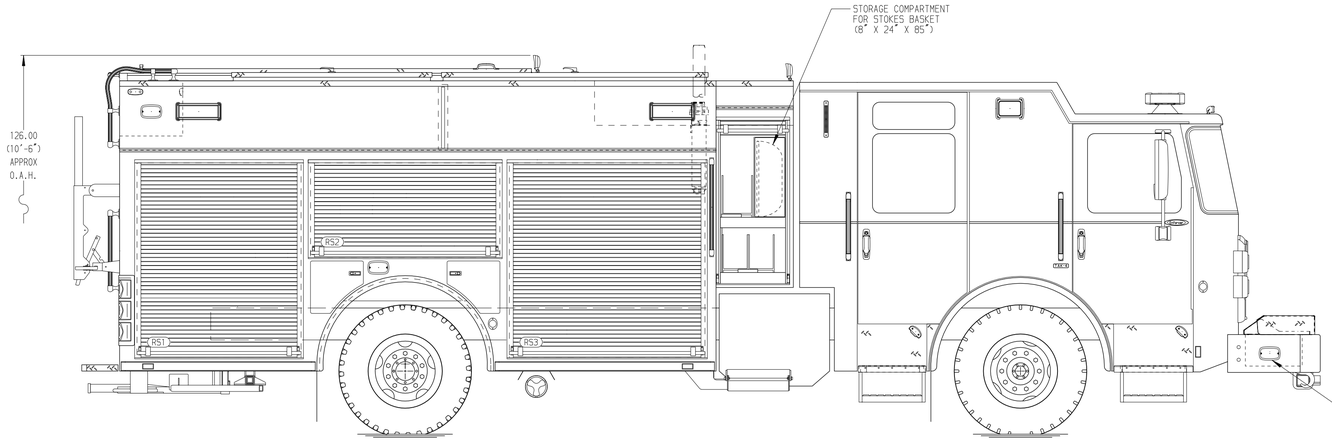

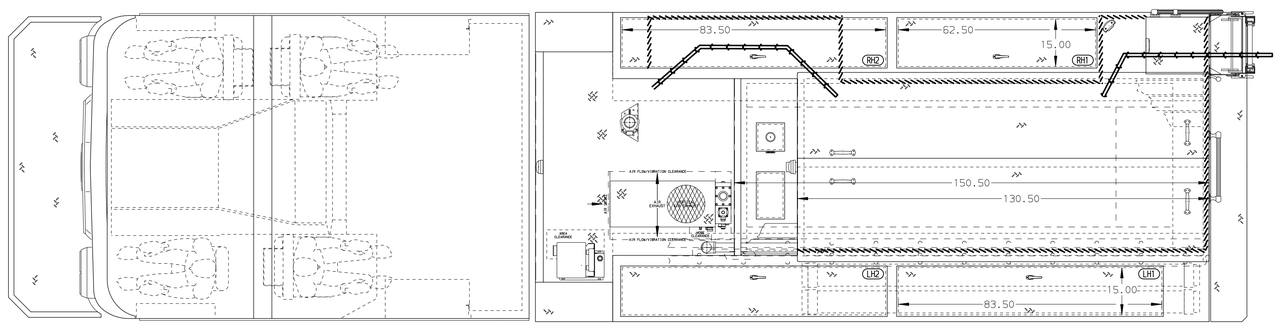

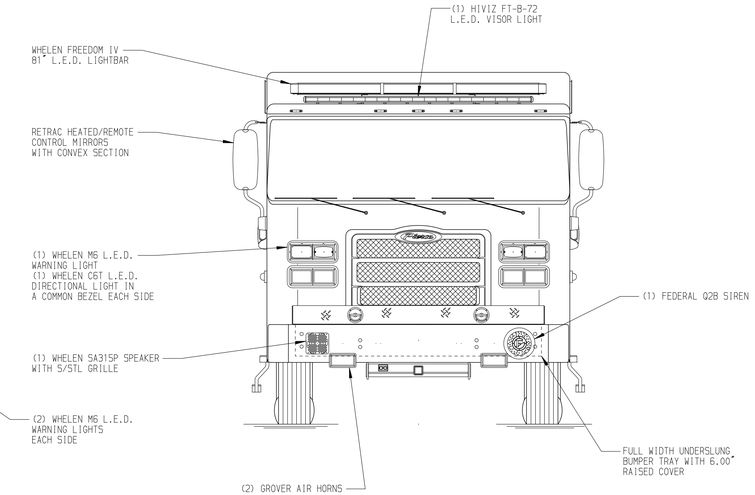

HOSEBED CAPACITY

BED 1
400' OF 3.00" D.J. POLY HOSE

BED 2
700' OF 5.00" D.J. POLY HOSE

BED 3
400' OF 3.00" D.J. POLY HOSE

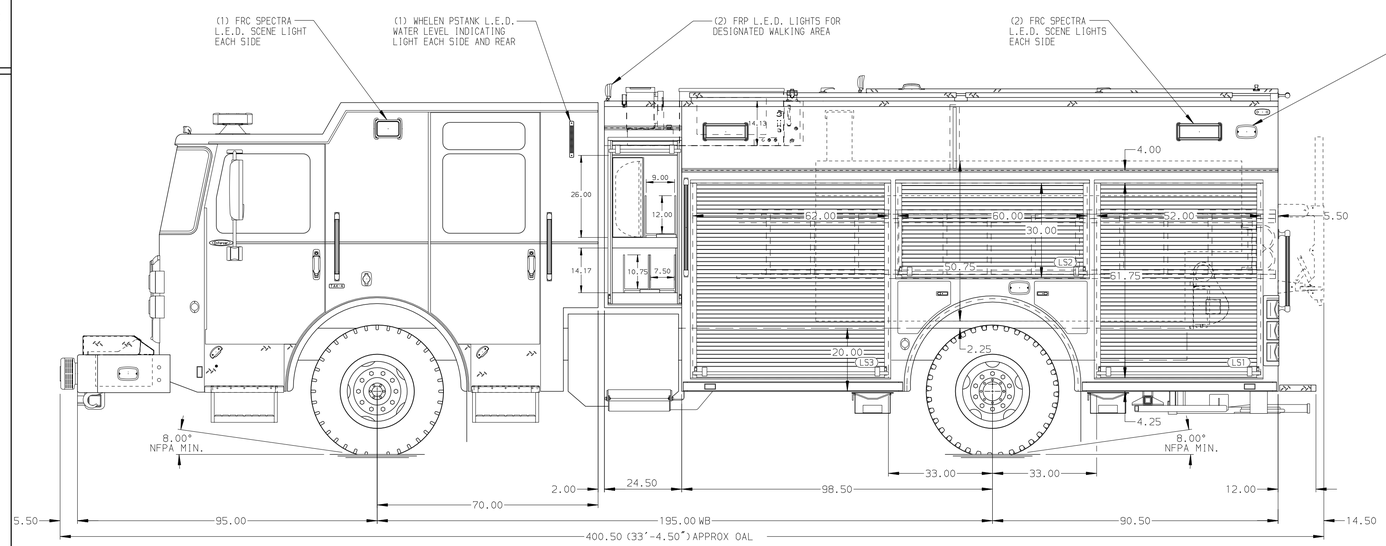

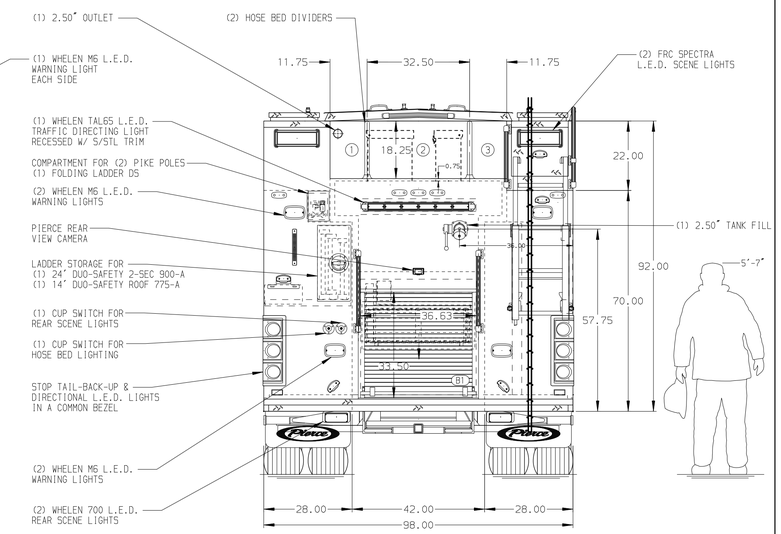

MAXIMUM O.A.H. - 132.00"

NOTE

DIMENSIONS SHOWN ARE APPROXIMATE AND ARE SUBJECT TO MINOR DEVIATIONS AS MAY OCCUR OR BE NECESSARY IN CONSTRUCTION.
MINOR DETAILS NOT SHOWN.

1. ONE 1.50 OUTLET WITH 2.00 PIPING AND SWIVEL LOCATED IN LEFT SIDE OF BUMPER TRAY
2. SHORELINE RECEPTACLE WITH KUS5MAUL SUPER AUTO-EJECT LOCATED ON DRIVER SIDE OF THE CAB
3. AIR INLET WITH DISCONNECT COUPLING IN THE DRIVER SIDE STEPWELL
4. BATTERY CHARGER LOCATED IN COMPARTMENT PER SHOP ORDER
5. BATTERY CHARGE INDICATOR LOCATED ON THE DRIVER SIDE SEAT RISER
6. SIX ADJUSTABLE SHELVES LOCATED PER SHOP ORDER
7. FOUR FLOOR MOUNTED SLIDE-OUT TRAYS LOCATED PER SHOP ORDER
8. TWO SLIDE-OUT TOOLBOARDS LOCATED PER SHOP ORDER
9. TWO ADJUSATBLE SLIDE OUT TRAYS LOCATED PER SHOP ORDER
10. AKRON CORD REEL MODEL ERWC-10-28 WITH 200' OF 10/4 CABLE LOCATED IN COMPARTMENT B1
11. SEVEN 120V DUPLEX RECEPTACLES LOCATED PER SHOP ORDER
12. ONE 120V 8-PLACE RECEPTACLE STRIP LOCATED PER SHOP ORDER
13. CIRCUIT BREAKER PANEL LOCATED PER SHOP ORDER
14. WIRING FOR AUTOMATIC TIRE CHAINS
15. TWO SWING-OUT TOOLBOARDS LOCATED PER SHOP ORDER
16. ONE TILTING/SLIDE-OUT TRAY LOCATED PER SHOP ORDER
17. ONE TOOLBOARD ADDED TO SLIDE-OUT TRAY LOCATED PER SHOP ORDER
18. 100LB OIL DRY HOPPER LOCATED PER SHOP ORDER
19. TWO VERTICAL PARTITONS LOCATED PER SHOP ORDER

REV	DATE	BY	CH
B	14AUG19	COL	KBO
A	10JUL19	COL	KBO

CHASSIS DATA	
MAKE	PIERCE
MODEL	ENFORCER

TITLE	Pierce PUC Pumper Approval Drawing -
FOR	Thorn Township Fire Department -
DWG NO.	34034AD

Pierce MANUFACTURING INC.

JOB NO.	34034
SCALE	1:24
DATE	
DRAWN BY	COL
	17JUN19
CHECKED BY	KBO
	17JUN19
SHEET SIZE	D
SHEET NO.	1 OF 1

View File Created 22-AUG-2019 08:51:54