RIGHT SIDE COMPARTMENTS CONTAIN THE FOLLOWING:

COMPARTMENT RS1 CONTAINS:
- (1) RACK FOR 14 SCBA BOTTLES
- (1) ADJ SHELF WITH 1.0" FRONT LIP
- (1) FLOOR MOUNTED TRAY WITH SIDE SLIDES
- (1) STD DEPTH ADJ SHELF

COMPARTMENT RS2 CONTAINS:
- (1) STD DEPTH ADJ SHELF
- (1) TWO WAY SLIDE OUT TRAY WITH TOOLBOARD
- (1) VERTICAL COMPARTMENT DIVIDER
- (2) 15/20A, 120V DUPLEX RECEPTACLES 200" OF 10/3 YELLOW CORD
- (2) 20A,120V DUPLEX RECEPTACLES

COMPARTMENT RS3 CONTAINS:
- (1) HORIZONTAL FLOOR EXTENSION
- (2) TWO WAY SLIDE OUT TRAYS WITH TOOLBOARDS
- (1) FLOOR MOUNTED TRAY WITH SIDE SLIDES

COMPARTMENT RS4 CONTAINS:
- (3) 2-WAY ADJ SLIDE OUT TRAYS

COMPARTMENT RS5 CONTAINS:
- (3) 2-WAY ADJ SLIDE OUT TRAYS
- (4) POLY TOOL BOXES
- CAB LIFT CONTROLLER
- (1) 20A, 120V DUPLEX RECEPTACLE

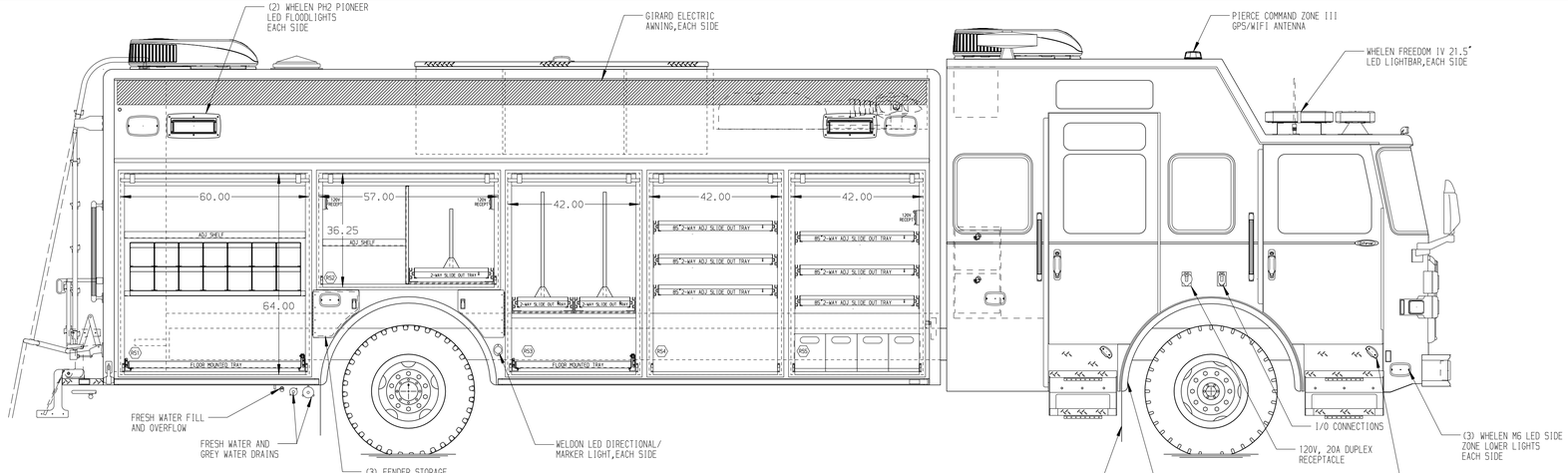

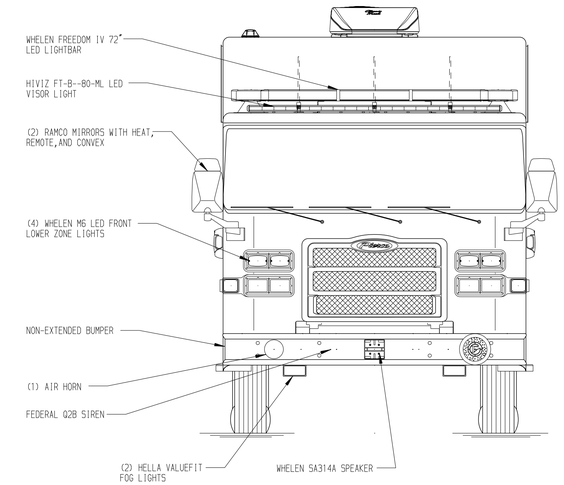

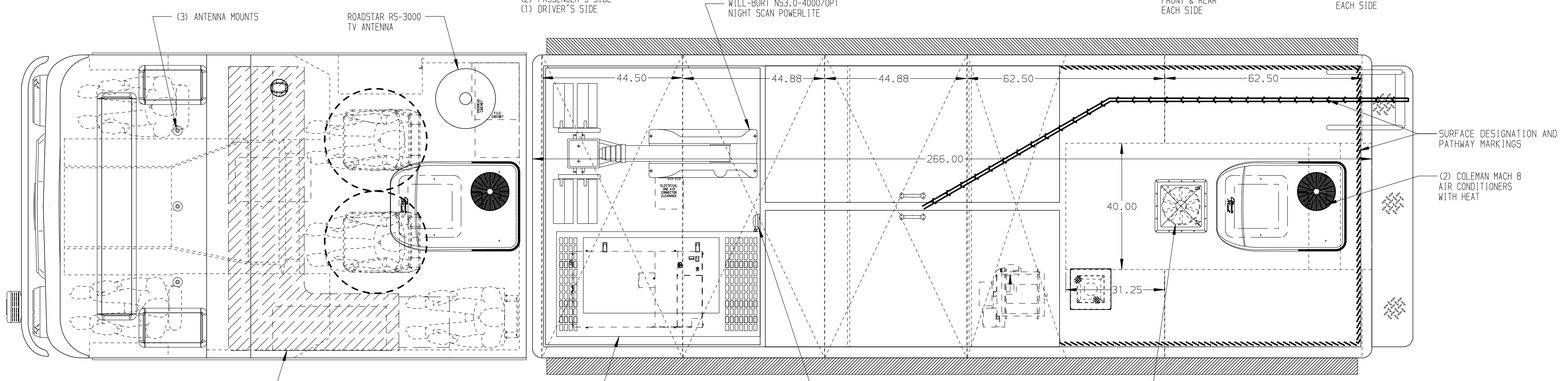

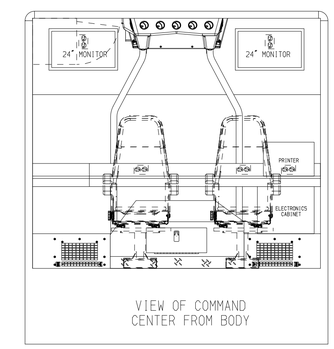

VIEW OF COMMAND CENTER FROM BODY

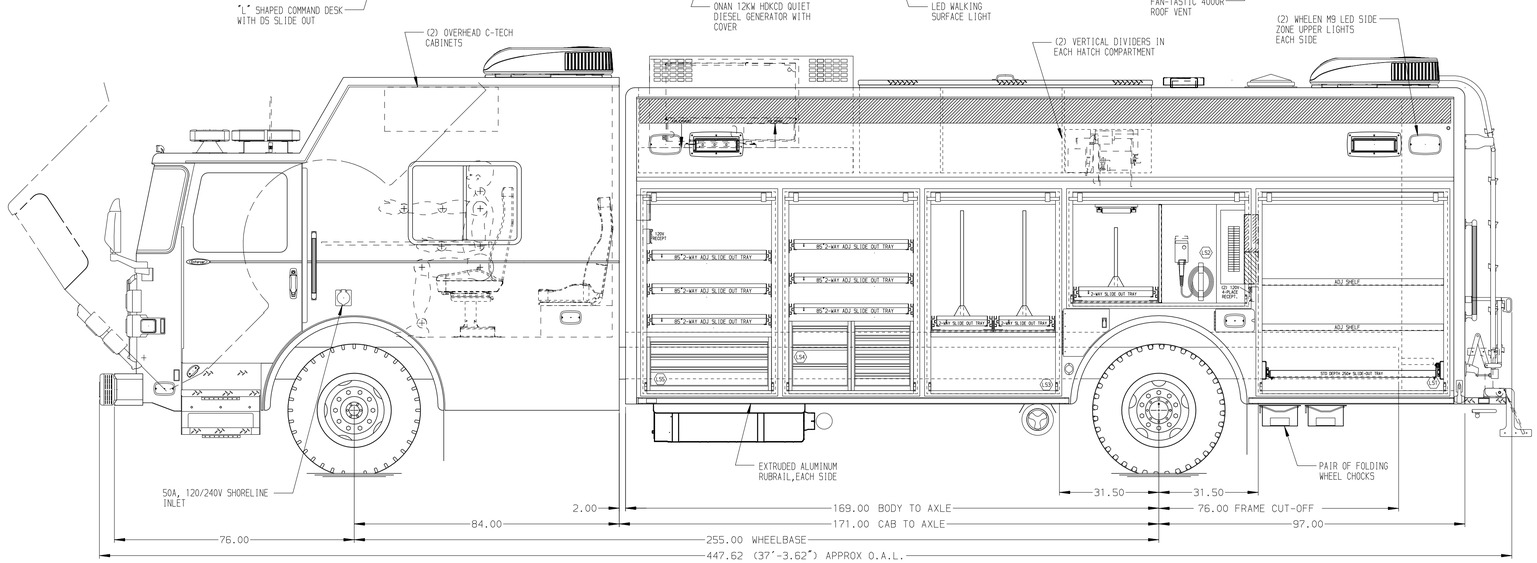

LEFT SIDE COMPARTMENTS CONTAIN THE FOLLOWING:

COMPARTMENT LS1 CONTAINS:
- (2) STD DEPTH ADJ SHELVES
- (1) STD DEPTH ADJ SLIDE OUT TRAY

COMPARTMENT LS2 CONTAINS:
- (1) TWO WAY SLIDE OUT TRAY WITH TOOLBOARD
- (1) VERTICAL COMPARTMENT DIVIDER
- (1) CIRCUIT BREAKER PANEL
- (1) SUB FEED BOX
- (1) GENERATOR METER PANEL
- (1) NIGHT SCAN CONTROLLER
- (1) ELECTRIC CORD REEL WITH 200' OF 10/3 YELLOW CORD
- (2) 120V 4-PLACE RECEPTACLES

COMPARTMENT LS3 CONTAINS:
- (1) HORIZONTAL FLOOR EXTENSION
- (2) TWO WAY SLIDE OUT TRAYS WITH TOOLBOARDS

COMPARTMENT LS4 CONTAINS:
- (3) 2-WAY ADJ SLIDE OUT TRAYS
- (1) 3-DRAWER C-TECH CABINET
- (1) 6-DRAWER C-TECH CABINET

COMPARTMENT LS5 CONTAINS:
- (3) 2-WAY ADJ SLIDE OUT TRAYS
- (3) PROGRESSIVE DYNAMIC PD2180 CHARGERS
- (1) 3-DRAWER C-TECH CABINET
- (1) 20A, 120V DUPLEX RECEPTACLES

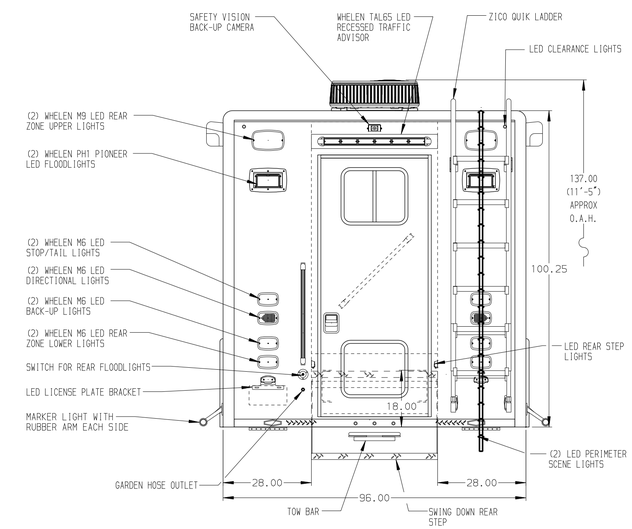

NOTE

DIMENSIONS SHOWN ARE APPROXIMATE AND ARE SUBJECT TO MINOR DEVIATIONS AS MAY OCCUR OR BE NECESSARY IN CONSTRUCTION.
MINOR DETAILS NOT SHOWN.

NOTES:
1. AIR INLET WITH DISCONNECT COUPLING LOCATED ON THE DRIVER'S SEAT RISER
2. POLISHED S/S SCUFFPLATES ON CAB AND CREW CAB DOOR JAMBS
3. FLOOR IN CAB AND CREW CAB TO BE ALUMINUM TREADPLATE
4. LARSON HANDHELD SPOTLIGHT LOCATED IN FRONT OF THE OFFICER'S SEAT
5. PULL STRAPS ON ALL BODY ROLL-UP DOORS
6. S/S "L"-SHAPED GUARDS ON ALL BODY ROLL-UP DOORS
7. PIERCE LED LIGHTS IN ALL BODY AND HATCH COMPARTMENTS

FRONTAL IMPACT PROTECTION

CLEAR DOOR WIDTH KEY

AMDOR ROLL UP DOORS:	-2 1/4"
GORTITE ROLL UP DOORS:	-2 1/2
PIERCE DOUBLE LAP DOORS:	-4 1/4"
PIERCE LIFT-UP LAP DOORS:	-1 1/2"

(EX: 60"F-F - 2 1/4"= 57 3/4" CLEAR)
(F-F)= FRAME TO FRAME

REV	DATE	BY	CH
7	27JAN20	DHE	AZU
6	14DEC19	DHE	AZU
5	23SEP19	ALZ	AZU

CHASSIS DATA
MAKE: PIERCE
MODEL: EN8424

Pierce MANUFACTURING INC.

TITLE: HEAVY DUTY RESCUE
WALKIN/NON-WALKIN COMBO

FOR: KERN COUNTY
KERN COUNTY, CA

DWG NO.: 34057AD-SH1

JOB NO.	34057
SCALE	1:24
DATE	
DRAWN BY	DHE 05SEP19
CHECKED BY	AZU 09SEP19
SHEET SIZE	D
SHEET NO.	1 OF 2

View File Created 27-JAN-2020 10:42:33