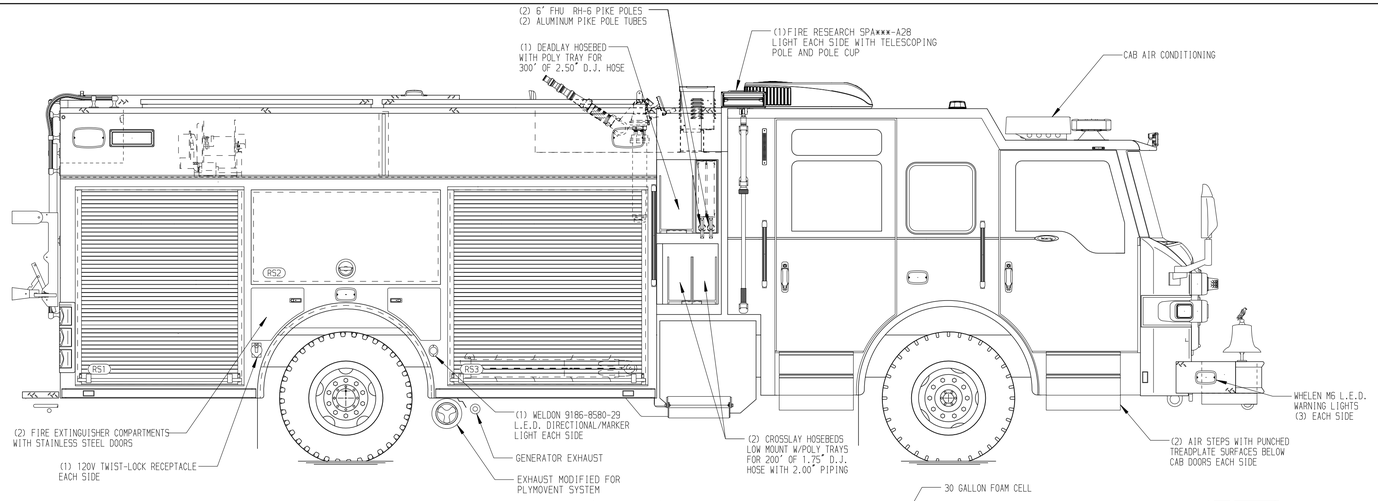

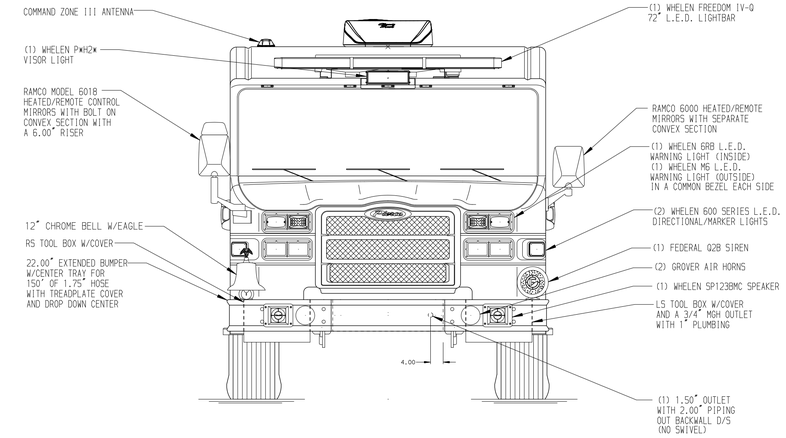

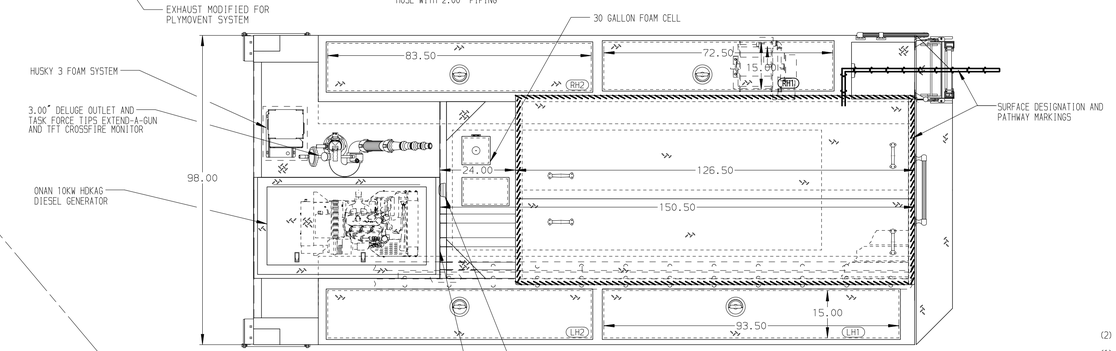

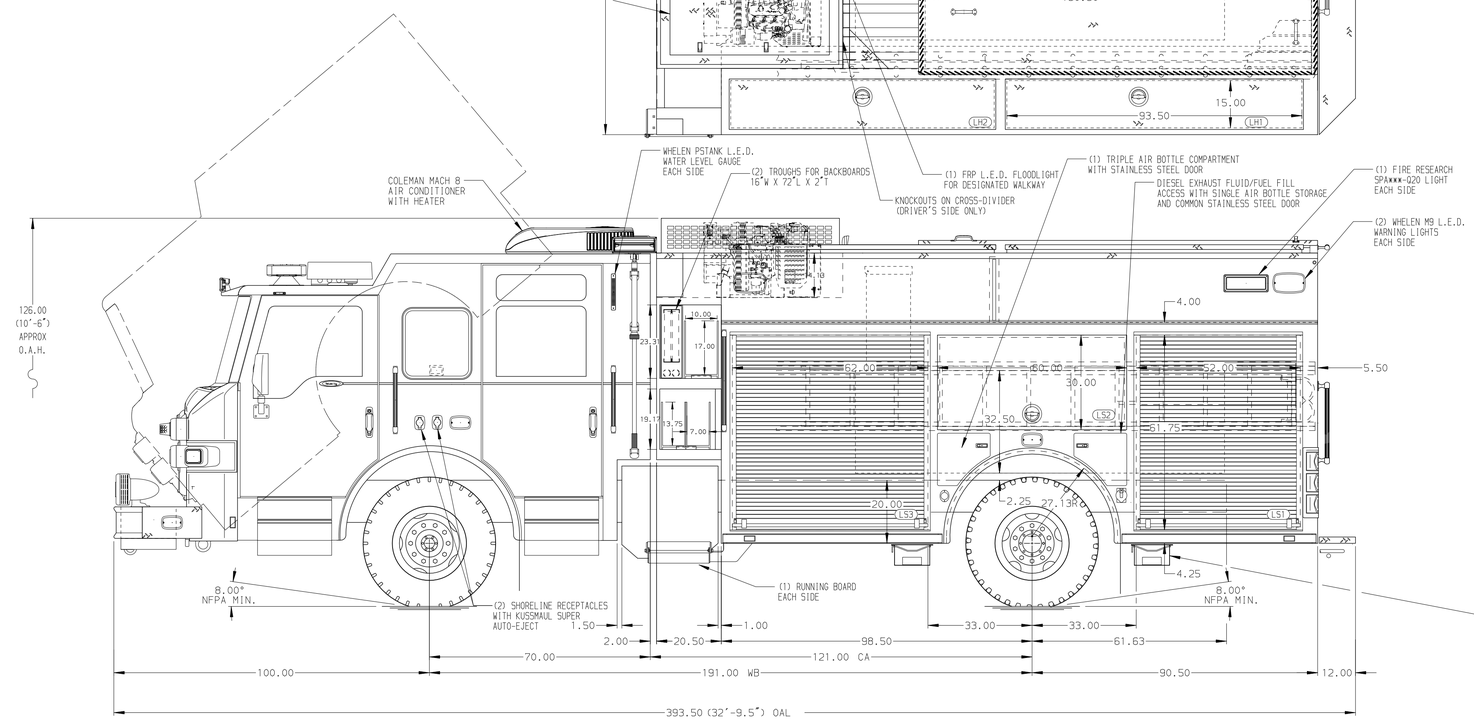

HOSEBED CAPACITIES

1. 300' OF 1.75" D.J. POLY HOSE
2. 300' OF 2.50 D.J. POLY HOSE
3. 300' OF 2.50 D.J. POLY HOSE
4. 800' OF 5.00 D.J. POLY HOSE

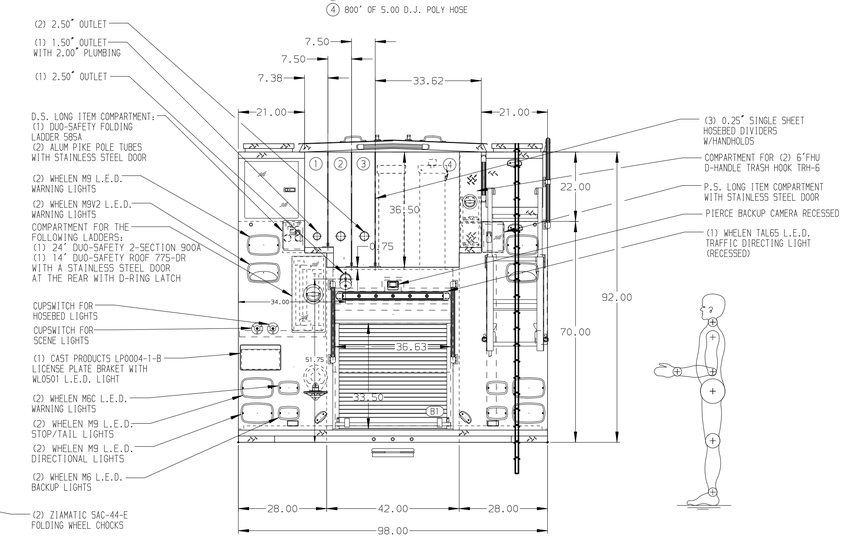

ALUMINUM BODY

NOTE

DIMENSIONS SHOWN ARE APPROXIMATE AND ARE SUBJECT TO MINOR DEVIATIONS AS MAY OCCUR OR BE NECESSARY IN CONSTRUCTION.
MINOR DETAILS NOT SHOWN.

1. BATTERY CHARGER INDICATOR BEHIND DRIVER'S SEAT DISPLAYED THROUGH WINDOW
2. SUB-FEED CIRCUIT BREAKER PANEL IN COMPARTMENT LS3
3. DUAL L.E.D. LIGHT STRIPS LOCATED IN HOSE BED
4. PULL STRAP ON DOOR IN COMPARTMENTS LS2,RS2
5. ONE FULL WIDTH/DEPTH ADJUSTABLE SHELF IN COMPARTMENTS LS2,B1; TWO IN RS3; THREE IN LS3
6. ONE FULL WIDTH/DEPTH FIXED SHELF IN COMPARTMENT RS3
7. ONE PARTITION BETWEEN LS1/B1, RS1/B1
8. ONE SLIDE-OUT ADJUSTABLE TRAY IN COMPARTMENT LS1; TWO IN RS1
9. ONE FLOOR MOUNTED SLIDE-OUT TRAY IN COMPARTMENTS LS1,RS1
10. S/STL SCUFFPLATE ON ALL SIDES OF CROSSLAY OPENINGS
11. CIRCUIT BREAKER PANEL IN COMPARTMENT LS3
12. TWO TILT'S'LIDE-OUT TRAYS IN COMPARTMENT RS2
13. ONE SLIDE-OUT TOOLBOARD WITH PEGBOARD IN COMPARTMENT RS3
14. ONE HANNAY ELECTRIC REWIND CORD REEL MODEL 1618-17-18 WITH 200 OF 10/3 CABLE LOCATED IN RH1
15. AIR INLET WITH DISCONNECT COUPLING LOCATED ON DS SEAT RISER
16. S/STL SCUFFPLATES AT CAB DOOR JAMBS
17. BATTERY CHARGER LOCATED IN CAB, REAR FACING SEAT RISER
18. COVER TO PROTECT EXPOSED WIRING IN COMPARTMENT LS3
19. TWO ZICO AIR BOTTLE HOLDERS LOCATED IN COMPARTMENT RS2; TWO MOUNTED AT PICK UP
20. CABLE RESTRAINT ON ALL FOUR AIR BOTTLE COMPARTMENT DOORS
21. ONE DUPLEX RECEPTABLE LOCATED IN COMPARTMENT RS3
22. VERTICAL DIVIDER LOCATED IN COMPARTMENTS LS2,RS2,RS3
23. LITTLE GIANT LADDER MODEL 17 LOCATED IN COMPARTMENT RS3
24. GENERATOR GAUGE PANEL IN COMPARTMENT RS1

REV	DATE	BY	CH
5	10MAR20	LME	SMA
4	23JAN20	LME	SMA
3	18NOV19	LME	SMA
2	07NOV19	LME	SMA
1	020CT19	LME	SMA

CHASSIS DATA
MAKE: PIERCE
MODEL: VELOCITY

Pierce MANUFACTURING INC.

TITLE: 1500-D-530P, 500 WATER 30 FOAM, 189" BODY, PUC (2) XLAYS,(1) DEADLAY, DELUGE, REEL, GENERATOR

FOR: CITY OF HENDERSON
HENDERSON, NEVADA

DWG NO.: 34124AD

JOB NO.	34124
SCALE 1:24	DATE
DRAWN BY LME	02JUL19
CHECKED BY SMA	10JUL19
SHEET SIZE D	SHEET NO. 1 OF 1

View File Created 10-MAR-2020 13:14:18