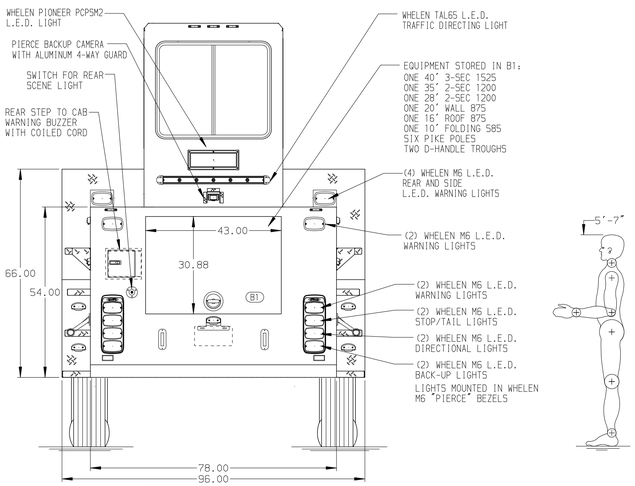

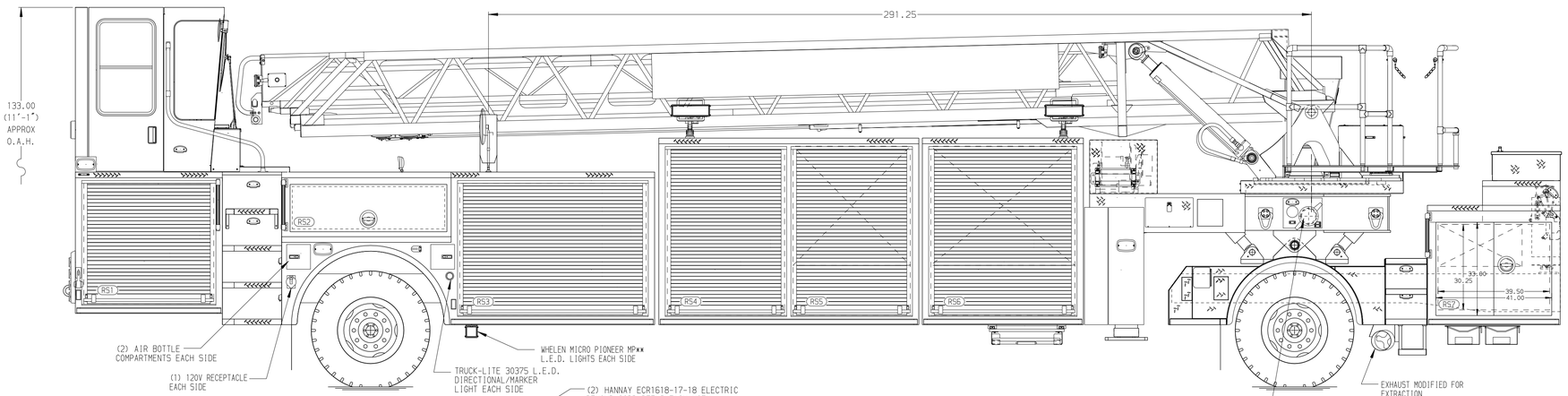

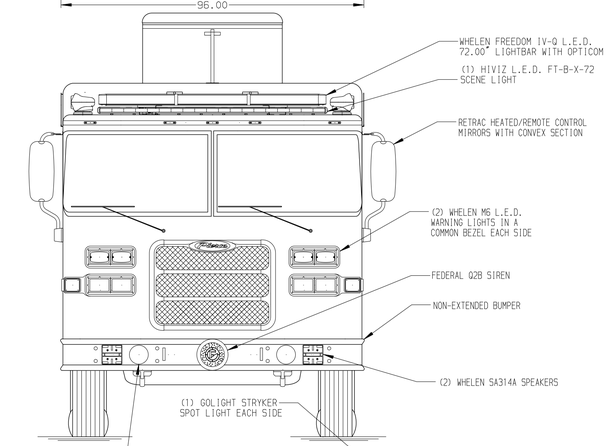

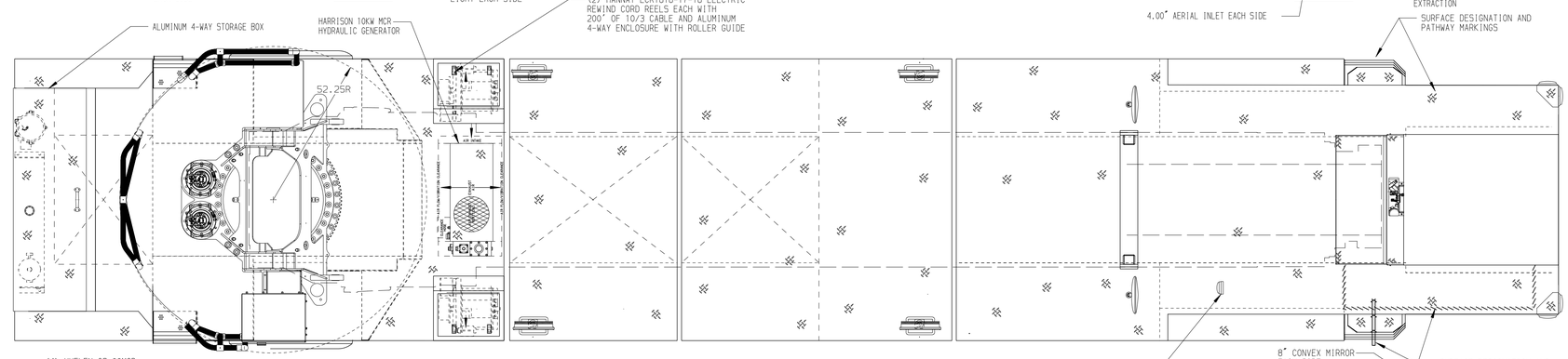

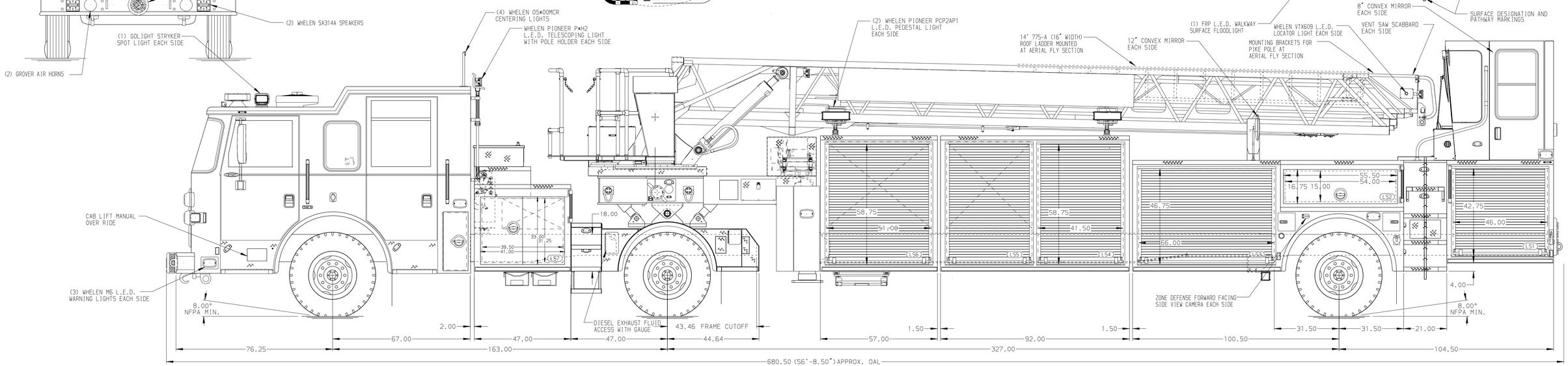

ALUMINUM BODY

MAXIMUM O.A.L. 683.50"

MAXIMUM O.A.H. 133.00"

NOTE

DIMENSIONS SHOWN ARE APPROXIMATE AND ARE SUBJECT TO MINOR DEVIATIONS AS MAY OCCUR OR BE NECESSARY IN CONSTRUCTION.
MINOR DETAILS NOT SHOWN.

1. BATTERY CHARGER LOCATED IN COMPARTMENTS PER SHOP ORDER
2. BATTERY CHARGE INDICATOR LOCATED THROUGH DRIVERS SIDE CAB WINDOW
3. FOURTEEN FULL WIDTH/DEPTH ADJUSTABLE SHELF IN COMPARTMENTS PER SHOP ORDER
4. AIR IN LET WITH DISCONNECT LOCATED IN DRIVERS SIDE STEP WELL
5. AIR OUTLET WITH SHUT OFF VALVE LOCATED ON RIGHT SIDE WALKWAY
6. SHORELINE RECEPTACLE WITH KUSSMAUL SUPER AUTO-EJECT LOCATED ON DRIVER SIDE OF THE CAB
7. FOUR FLOOR MOUNTED 1-WAY SLIDE-OUT TRAY WITH 3" SIDES (1/2 DEPTH OF TRANSVERSE) IN COMPARTMENTS PER SHOP ORDER
8. SIX FLOOR EXTENSION IN COMPARTMENTS PER SHOP ORDER
9. CIRCUIT BREAKER PANEL IN COMPARTMENT PER SHOP ORDER
10. ONE FULL WIDTH/DEPTH ADJUSTABLE SHELF WITHOUT FRONT LIP LOCATED PERS HOP ORDER
11. ONE FLOOR MOUNTED 2-WAY SLIDE-OUT TRAY WITH 4" SIDES FULL TRANSVERSE IN COMPARTMENTS PER SHOP ORDER
12. BRACKET FOR MOUNTING LADDER PIPE
13. 2-WAY INTERCOM SYSTEM BETWEEN AERIAL TIP AND TURNTABLE
14. LYFEPULLEY RESCUE SYSTEM AT AERIAL TIP WITH ROPE TIE BAR AT BASE SECTION
15. LIFTING EYE ROPE RESCUE ATTACHMENT AT AERIAL TIP
16. THREE 120V RECEPTACLES LOCATED PER SHOP ORDER
17. ONE 120V RECEPTACLE STRIP LOCATED PER SHOP ORDER
18. TWO VERTICAL PARTITION LOCATED IN COMPARTMENTS PER SHOP ORDER
19. ONE TOOLBOARD ON SLIDE-OUT TRAY LOCATED IN COMPARTMENT PER SHOP ORDER
20. RESPOND READY STORAGE CABINET LOCATED IN COMPARTMENT PER SHOP ORDER
21. FIVE SCBA BRACKET TO BE MOUNTED IN COMPARTMENTS PER SHOP ORDER
22. ONE PLASTIC SHEETING HOLDER IN COMPARTMENT PER SHOP ORDER
23. SKF MONO 22 POINT LUBE SYSTEM
24. BOOM SUPPORT RAISED 2.50"
25. TWO WIRELESS CAMERA SYSTEM AT FLY SECTION

REV	DATE	BY	CH	
V	19NOV19	LWE	MSA	CHASSIS DATA
U	17OCT19	LWE	NDA	
T	02OCT19	LWE	SHA	MAKE
S	29AUG19	LWE	JBL	PIERCE
R	21AUG19	LWE	SHA	MODEL
				ARROW XT

Pierce MANUFACTURING INC.

TITLE: 102" ASCENDANT AERIAL TILLER AND BODY ASSY
NO PUMP/NO TANK

FOR: SAN DIEGO
SAN DIEGO, CA

DWG NO. 34153AD-SH1

JOB NO.	34153
SCALE 1:24	DATE
DRAWN BY LWE	14AUG19
CHECKED BY JBL	15AUG19
SHEET SIZE D	SHEET NO. 1 OF 2

View File Created 27-NOV-2019 10:46:02