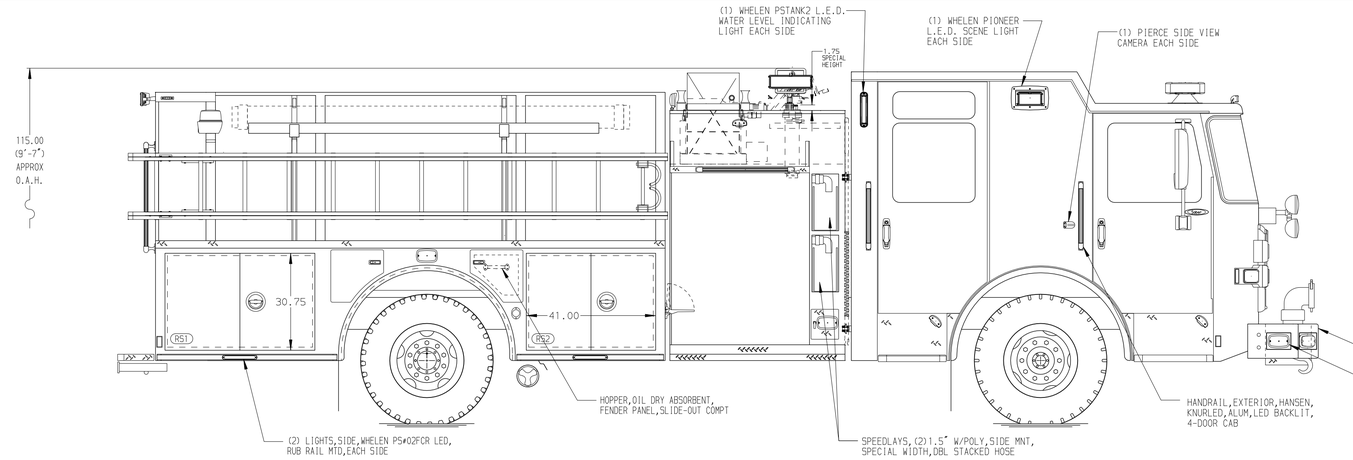

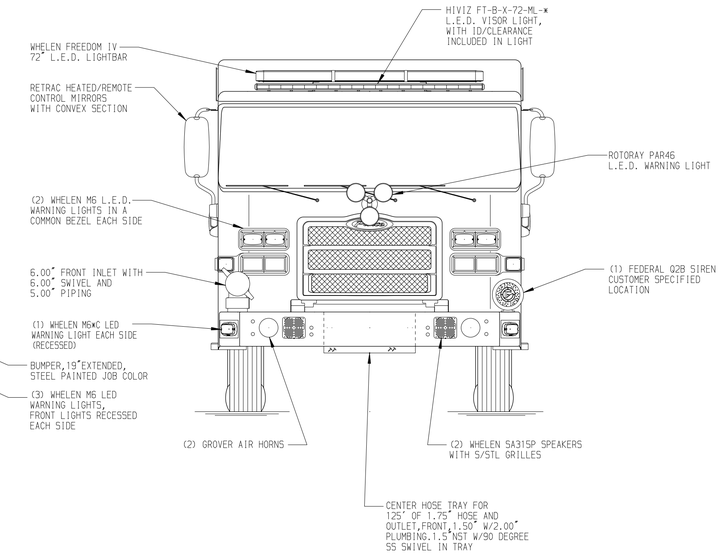

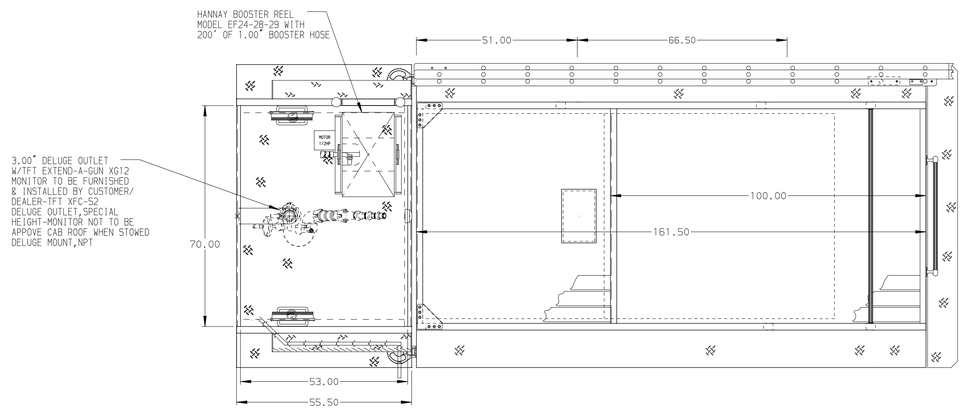

HOSEBED CAPACITIES

1. 1000' OF 4.00" D.J. POLY HOSE
2. 800' OF 2.50" D.J. POLY HOSE
3. 250' OF 2.50" D.J. POLY HOSE

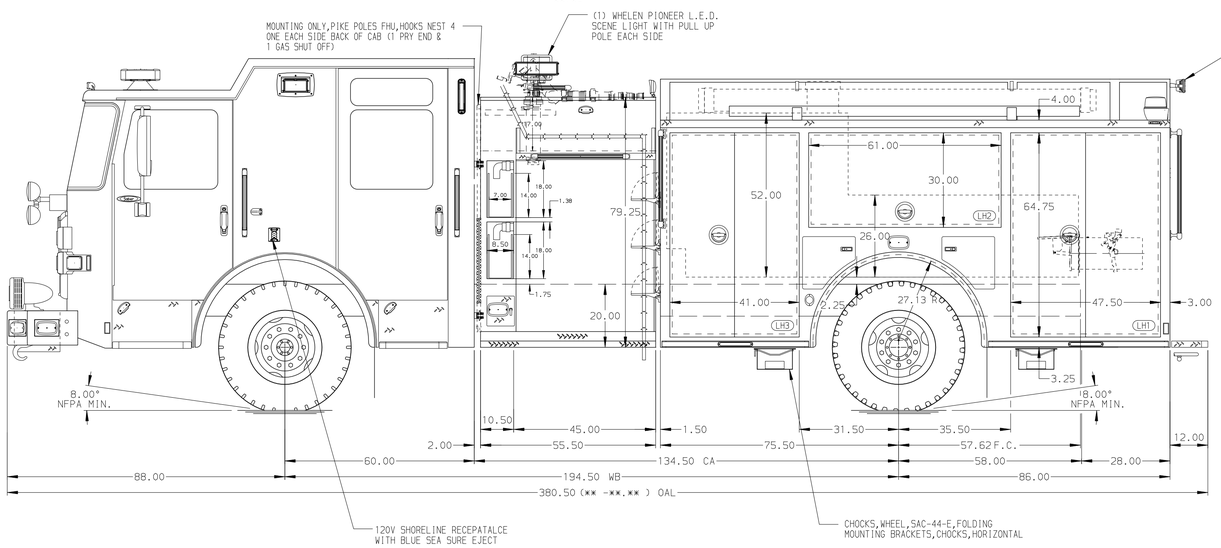

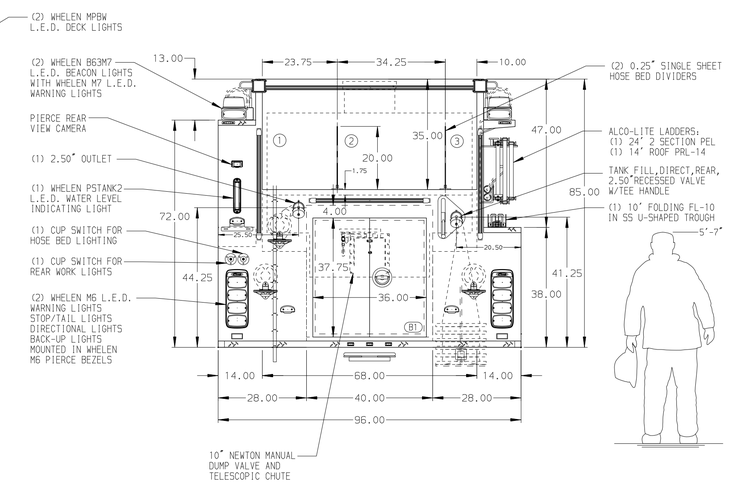

NOTE

DIMENSIONS SHOWN ARE APPROXIMATE AND ARE SUBJECT TO MINOR DEVIATIONS AS MAY OCCUR OR BE NECESSARY IN CONSTRUCTION.
MINOR DETAILS NOT SHOWN.

REV	DATE	BY	CH
3	13DEC19	JLA	AJA
2	11NOV19	JLA	AJA
1	21OCT19	JLA	AJA

CHASSIS DATA	
MAKE	PIERCE
MODEL	SABER FR
TITLE	1500-D-1000P,161 BODY,LS FL HGHT FRT&RR FDLER,RS LOW 45"SIDE CONTROL,(2)1.5"SPEEDLAYS
FOR	TAYLOR'S BRIDGE FIRE DEPARTMENT CLINTON,NORTH CAROLINA
DWG NO.	34175AD

Pierce MANUFACTURING INC.

JOB NO.	34175
SCALE	1:24
DATE	
DRAWN BY	COL 30JUL19
CHECKED BY	KBO 01AUG19
SHEET SIZE	D
SHEET NO.	1 OF 1

View File Created 13-DEC-2019 12:23:17