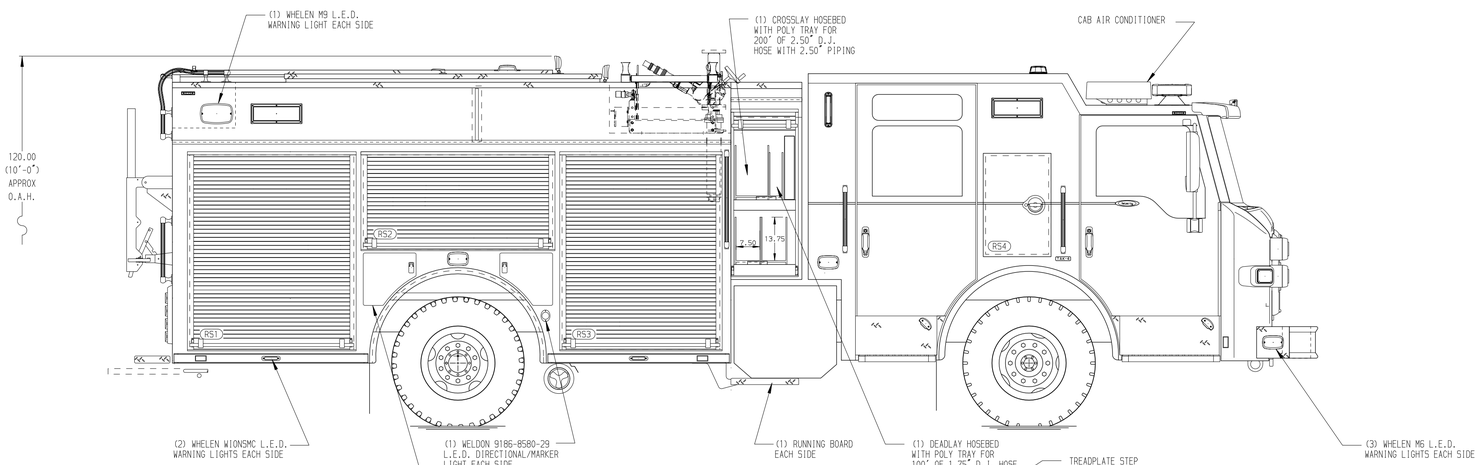

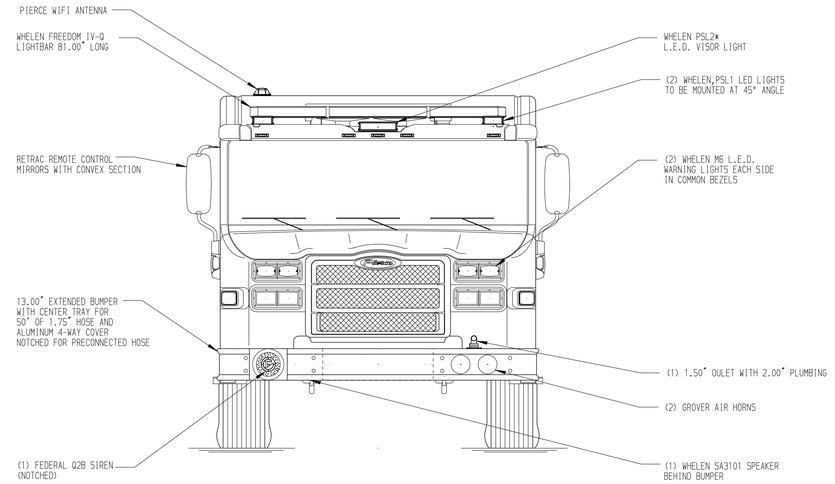

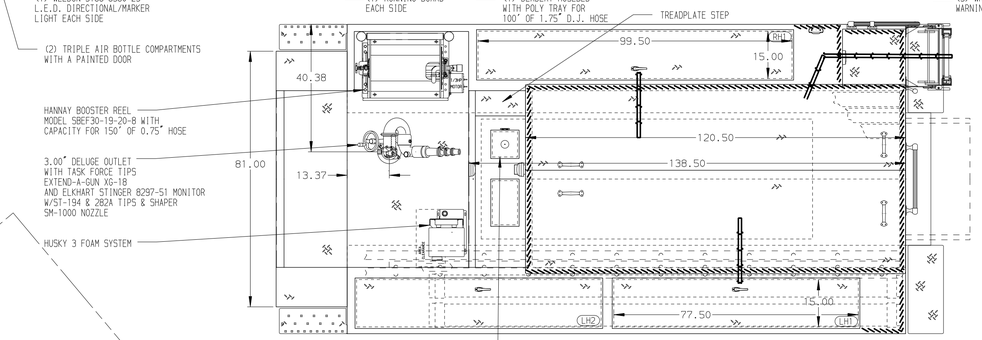

HOSEBED CAPACITIES

1 - 600' OF 3.00" HOSE

2 - 600' OF 5.00" HOSE

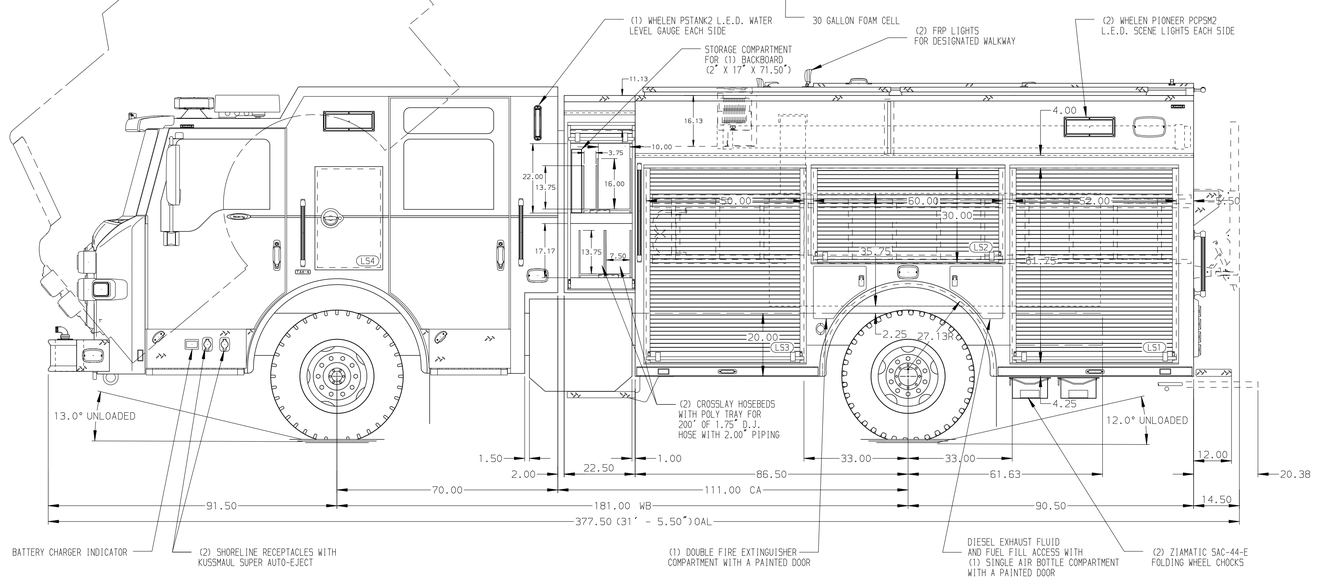

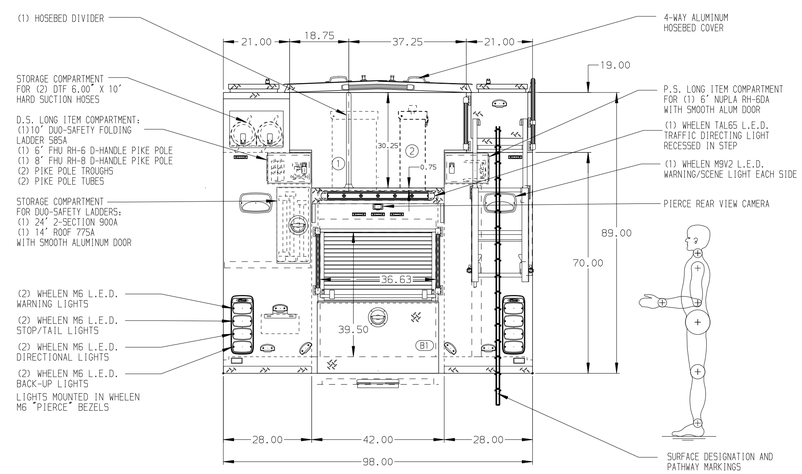

ALUMINUM BODY

SIDE ROLL AND FRONTAL IMPACT PROTECTION

NOTE

DIMENSIONS SHOWN ARE APPROXIMATE AND ARE SUBJECT TO MINOR DEVIATIONS AS MAY OCCUR OR BE NECESSARY IN CONSTRUCTION.
MINOR DETAILS NOT SHOWN.

1. 3 PIECE DOOR MOUNTED ANCHOR PLATE FOR NEDERMAN EXHAUST SYSTEM HOSE ON COMPARTMENT RS3
2. BATTERY CHARGER LOCATED IN DRIVER SIDE HATCH COMPARTMENT
3. BATTERY CHARGER INDICATOR LOCATED AT DRIVER'S SIDE STEP AREA
4. PULL STRAP ON BOTH CROSSLAY DOORS
5. ONE FULL WIDTH/DEPTH ADJUSTABLE SHELF IN COMPARTMENT LS2, RS1, RS2, & RS3 TWO IN LS1 & LS3
6. CABLE RELEASE LATCH WITH SINGLE HAND OPERATION FOR TRAY IN COMPARTMENT RS1 & RS3
7. ONE FLOOR MOUNTED SLIDE-OUT TRAY WITH 2.00" SIDES IN COMPARTMENT LS1, LS3, RS1, RS3, & B1
8. ONE BODY COMPARTMENT WITH LOUVERS SHALL HAVE A REMOVABLE FILTER LOCATED IN B1
9. ONE VERTICAL PARTITION IN COMPARTMENT LS1 & LS2
10. ALUMINUM PEGBOARD WITH TRACKS ON THE BACK WALL OF COMPARTMENT LS1
11. ALUMINUM PEGBOARD WITH TRACKS ON THE SIDE WALLS OF COMPARTMENT LS1
12 AIR INLET/OUTLET W/DISCONNECT COUPLING LOCATED DS PUMP PANEL
13. KUSSMAUL AIR COMPRESSOR LOCATED IN LS HATCH COMPARTMENT FORWARD NEXT TO BATTERY CHARGER
14. ONE PARTITION BETWEEN COMPARTMENTS LS1/B1 & RS1/B1
15. ONE ADJUSTABLE SLIDE-OUT TRAY LOCATED IN COMPARTMENT RS1
16. ONE ADJUSTABLE TILT/SLID-OUT TRAY LOCATED IN COMPARTMENT RS3
17. ALUMINUM PEGBOARD ON SIDE WALL OF COMPARTMENT LS1

REV	DATE	BY	CH
1	12NOV19	MMF	CWI
2	05NOV19	MMF	CWI
3	17OCT19	MMF	CWI

CHASSIS DATA	
MAKE	PIERCE
MODEL	VELOCITY FR
DWG NO.	34221AD

Pierce MANUFACTURING INC.

TITLE	1500-D-500P W/30G FOAM CELL, 177"PUC RESCUE BODY (3)XLAYS,(1)DEADLAY, HUSKY 3, DELUGE, HSH COMPT
FOR	FOLSOM FIRE DEPARTMENT FOLSOM, CALIFORNIA

JOB NO.	34221
SCALE	1:24
DATE	
DRAWN BY	MMF
	13AUG19
CHECKED BY	NPE
	15AUG19
SHEET SIZE	D
SHEET NO.	1 OF 1

View File Created 13-NOV-2019 12:48:55