RIGHT SIDE COMPARTMENTS CONTAIN THE FOLLOWING:

COMPARTMENT RS1 CONTAINS:
- (1) 20A, 120V DUPLEX RECEPTACLE
- (1) STD DEPTH SLIDE OUT TRAY
- (1) STD DEPTH ON SCENE SLIDE OUT TRAY
- (1) STD DEPTH ADJ SLIDE OUT/TILT TRAY
- (1) STD DEPTH ON SCENE FLOOR MTD TRAY

COMPARTMENT RS2 CONTAINS:
- (1) STD DEPTH ADJ SLIDE OUT/TILT TRAY

COMPARTMENT RS3 CONTAINS:
- (1) STD DEPTH ADJ SLIDE OUT/TILT TRAY
- (1) RACK FOR FIVE AIR BAGS

COMPARTMENT RS4 CONTAINS:
- (1) VERTICAL PEGBOARD COMPARTMENT DIVIDER
- PEGBOARD ON SIDE AND REAR WALLS
- (3) STD DEPTH ADJ SHELVES
- (3) STD DEPTH SLIDE OUT TOOLBOARDS WITH DUAL SLIDES

COMPARTMENT RS5 CONTAINS:
- (1) VERTICAL PEGBOARD COMPARTMENT DIVIDER
- (2) 3/4 DEPTH ADJ SHELVES
- (1) ON-SCENE 3/4 DEPTH FLOOR MOUNTED TRAY WITH TOOLBOARD
- (1) HORIZONTAL FLOOR EXTENSION
- (1) LOW PRESSURE AIR REEL WITH 200' OF HOSE
- (1) TOOL AIR CONTROL PANEL
- (1) 50A, 120/240V RECEPTACLE
- (1) RACK FOR LARGE AIR BAG
- (4) PIKE POLE TUBES

COMPARTMENT RS6 CONTAINS:
- (2) SPECIAL DEPTH 2-WAY ADJ SHELVES
- (2) 5" DIAMETER STORAGE TUBES
- POLY LINING ON FLOOR
- (1) ELECTRIC CORD REELS WITH 250' OF 10/3 BLACK CABLE

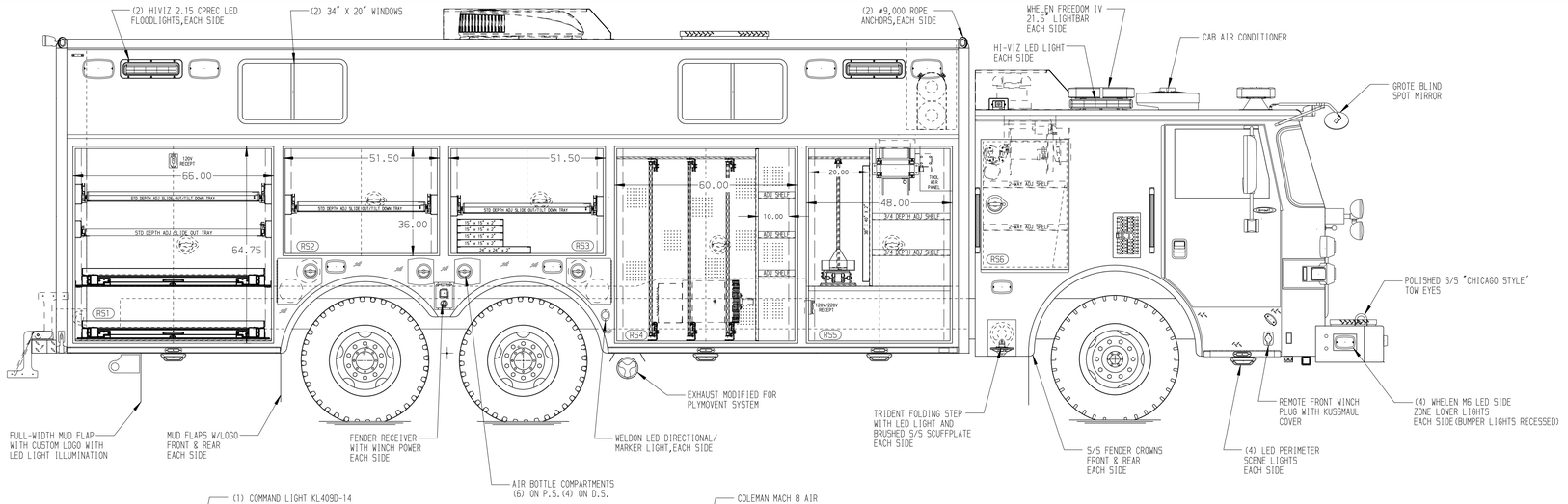

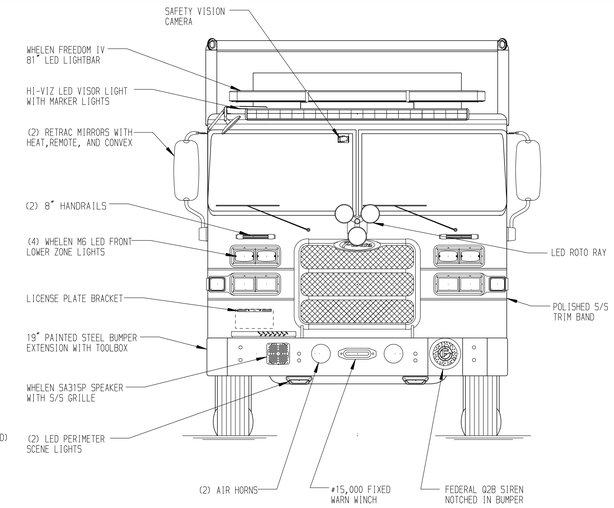

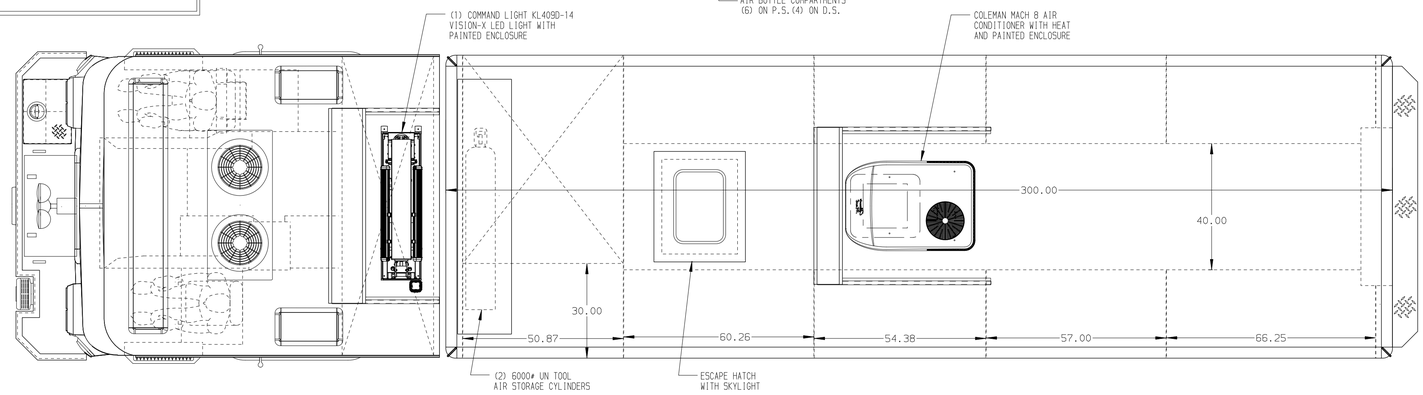

LEFT SIDE COMPARTMENTS CONTAIN THE FOLLOWING:

COMPARTMENT LS1 CONTAINS:
- (1) 30A, 240V T.L. RECEPTACLE
- (2) HYDRAULIC REELS W/100' OF HOSE EACH
- (1) 20A, 120V DUPLEX RECEPTACLE
- (1) 50A, 120V/240V RECEPTACLE
- (1) VERTICAL PEGBOARD DIVIDER
- (2) STD DEPTH ADJ SHELVES
- (1) SPECIAL DEPTH ADJ SHELF
- (2) SPECIAL DEPTH ON SCENE SLIDE OUT TRAYS
- (1) STD DEPTH ON SCENE FLOOR MTD TRAY

COMPARTMENT LS2 CONTAINS:
- (1) STD DEPTH ADJ SLIDE OUT/TILT TRAY

COMPARTMENT LS3 CONTAINS:
- (1) STD DEPTH ADJ SLIDE OUT/TILT TRAY

COMPARTMENT LS4 CONTAINS:
- (1) STD DEPTH ON SCENE SLIDE OUT TRAY
- (1) STD DEPTH ADJ SLIDE OUT TILT TRAY
- POLY LINING ON COMPARTMENT FLOOR
- (1) 20A, 120V DUPLEX RECEPTACLE

COMPARTMENT LS5 CONTAINS:
- (5) SPECIAL DEPTH ADJ SHELVES
- (1) VERTICAL PEGBOARD COMPARTMENT DIVIDER
- (1) VERTICAL REAR WALL PEGBOARD DIVIDER
- (1) CIRCUIT BREAKER PANEL
- (1) GENERATOR METER PANEL
- (1) LIGHT TOWER CONTROLLER
- (1) CAB TILT CONTROLS
- (4) PIKE POLE TUBES

COMPARTMENT LS6 CONTAINS:
- (2) SPECIAL DEPTH 2-WAY ADJ SHELVES
- (2) 5" DIAMETER STORAGE TUBES
- POLY LINING ON FLOOR
- (1) ELECTRIC CORD REELS WITH 250' OF 10/3 BLACK CABLE

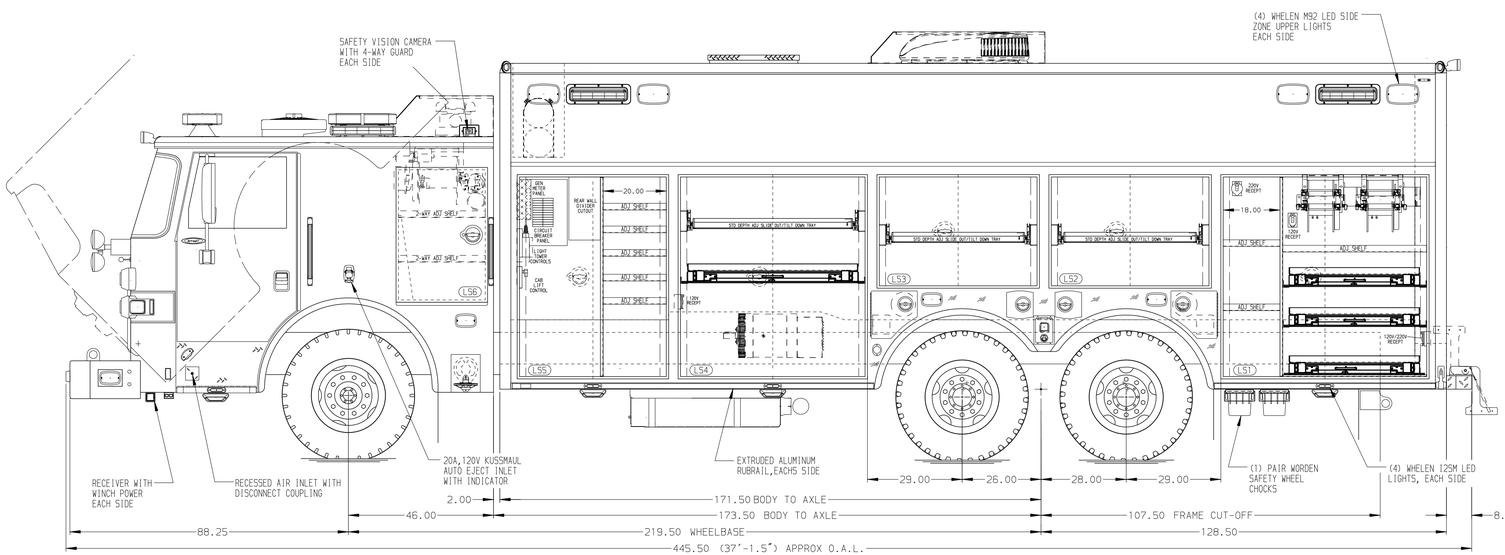

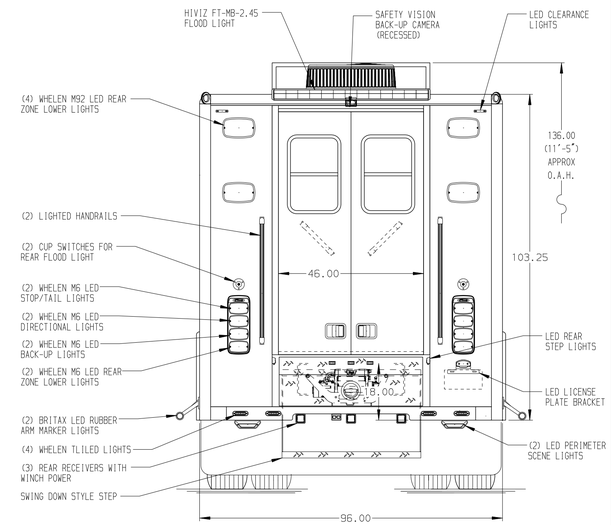

NOTE

DIMENSIONS SHOWN ARE APPROXIMATE AND ARE SUBJECT TO MINOR DEVIATIONS AS MAY OCCUR OR BE NECESSARY IN CONSTRUCTION.
MINOR DETAILS NOT SHOWN.

NOTES:
1. ONAN 25kW SINGLE PHASE PTO DRIVEN GENERATOR WITH SPLASH GUARD LOCATED BETWEEN THE FRAME RAILS
2. WARN #10,000 PORTABLE WINCH SHIPPED LOOSE
3. POLISHED S/S SCUFFPLATES ON CAB DOOR JAMBS
4. FLOOR IN CAB AND CREW CAB TO BE PADDED RUBBER
5. FIRECOM 5100D INTERCOM SYSTEM
6. KUSSMAUL PUMP PLUS 1200 CHARGER LOCATED BEHIND DRIVER'S SEAT
7. PLASTIC EDGING ON ALL CAB AND BODY SHELVES AND TRAYS
8. BRUSHED S/S SCUFFPLATES ON BOTTOM OF CAB AND BODY COMPARTMENT DOOR FRAMES
9. AMDOR DUAL LED LIGHT STRIPS IN ALL EXTERIOR BODY COMPARTMENTS
10. (4) SURVIVOR C4 LED STREAMLIGHTS, (1) ON PS DASH AND (3) SHIPPED LOOSE
11. (4) VULCAN 180 STREAMLIGHTS SHIPPED LOOSE

NOTE:
LAP DOORS HAVE BEEN SHOWN IN HIDDEN LINES TO CLEARLY IDENTIFY THE EQUIPMENT IN EACH COMPARTMENT. DASHED LINES ON SIDES ARE DOORS IN OPEN POSITION

CLEAR DOOR WIDTH KEY	
AMDOR ROLL UP DOORS:	-2 1/4"
GORTITE ROLL UP DOORS:	-2 1/2"
PIERCE DOUBLE LAP DOORS:	-4 1/4"
PIERCE LIFT-UP LAP DOORS:	-1 1/2"
(EX: 60"F-F - 2 1/4"= 57 3/4" CLEAR) (F-F)= FRAME TO FRAME	

REV	DATE	BY	CH
E	25MAR20	DHE	AZU
D	25MAR20	DHE	AZU
C	03MAR20	DHE	AZU
B	20FEB20	DHE	AZU
A	25NOV19	DHE	AZU

CHASSIS DATA
MAKE: PIERCE
MODEL: AX4600

Pierce MANUFACTURING INC.

TITLE: HEAVY DUTY RESCUE WALKIN/NON-WALKIN COMBO
FOR: ARLINGTON COUNTY, VA ARLINGTON, VA
RANDY SCHWARTZ
DWG NO.: 34245AD-SH1

JOB NO.	34245
SCALE	1:24
DATE	
DRAWN BY	DHE 15NOV19
CHECKED BY	AZU 14NOV19
SHEET SIZE	D
SHEET NO.	1 OF 1

View File Created 26-MAR-2020 10:20:52