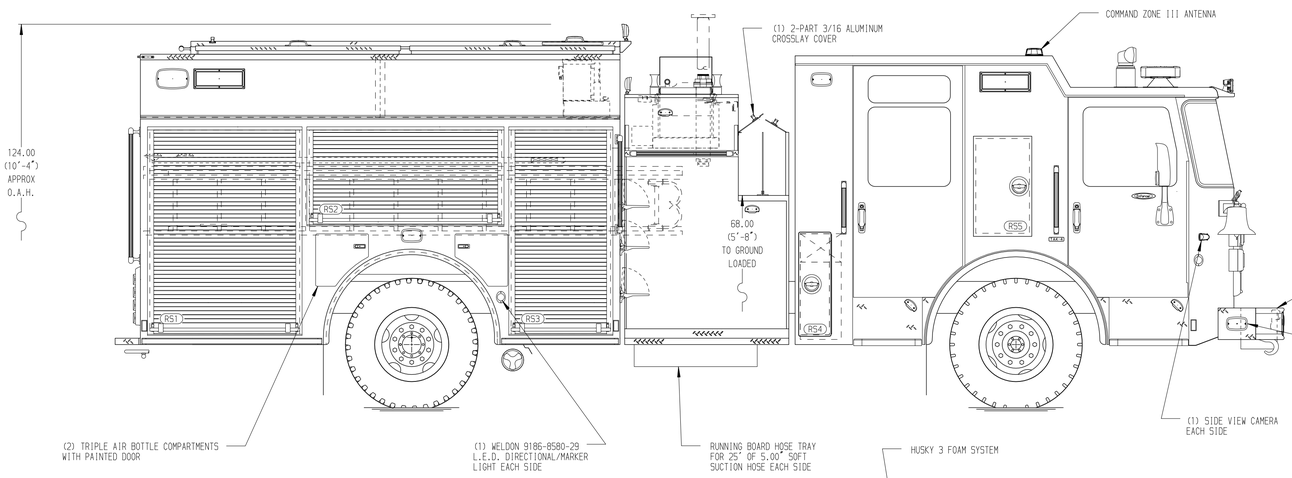

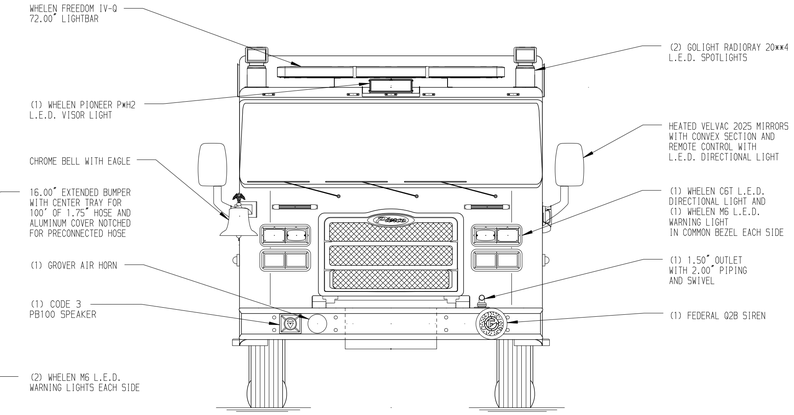

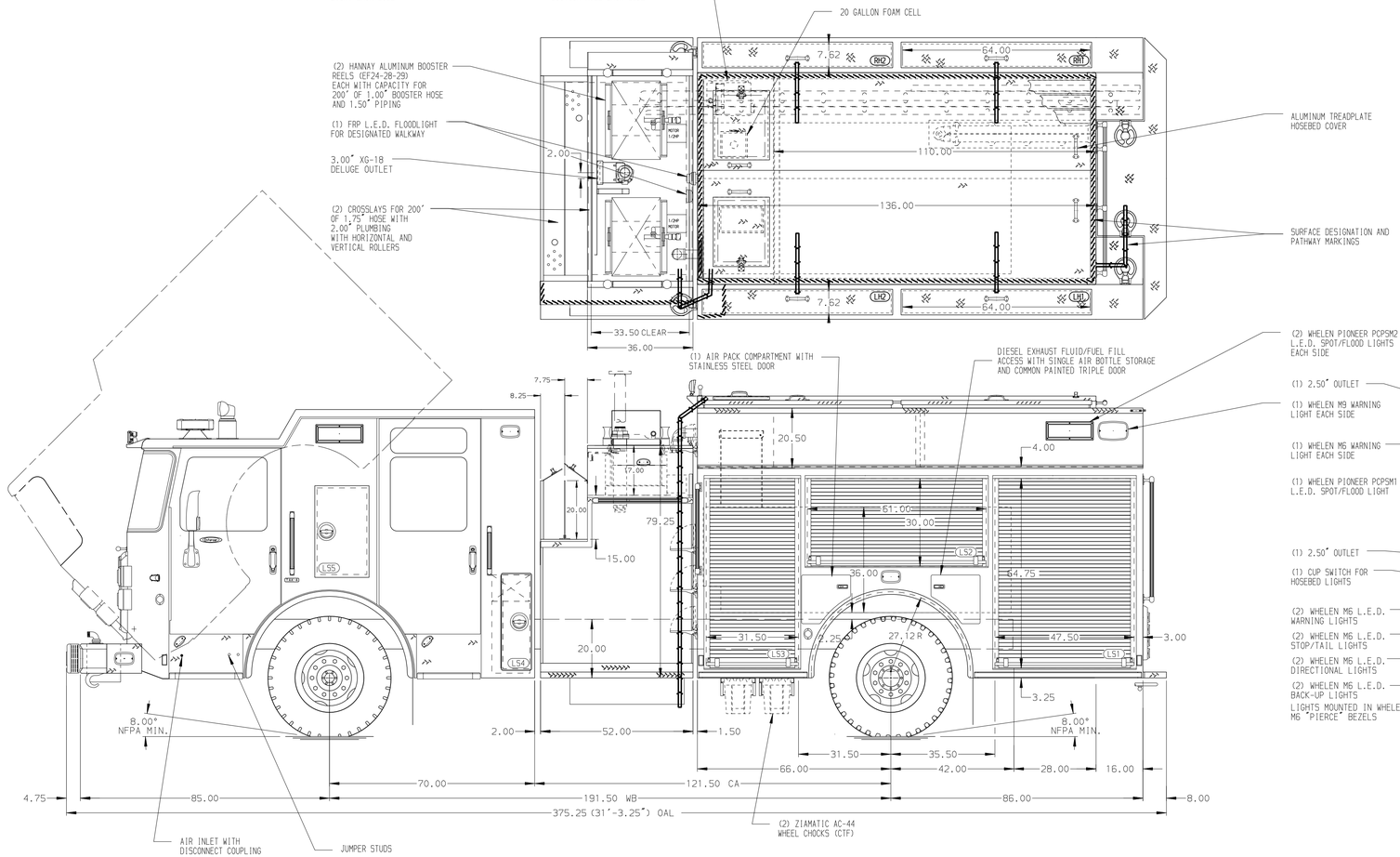

HOSEBED CAPACITIES

1. 200' OF 1.75" D.J. POLY HOSE
2. 200' OF 2.50" D.J. POLY HOSE
3. 600' OF 5.00" D.J. POLY HOSE
4. 600' OF 2.50" D.J. POLY HOSE
5. LITTLE GIANT LADDER STORAGE
6. 600' OF 2.50" D.J. POLY HOSE

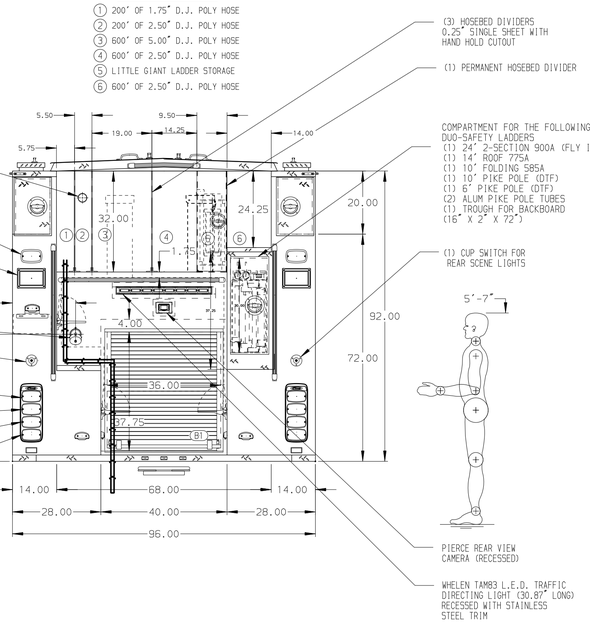

GALVANNEAL

SIDE ROLL AND FRONTAL IMPACT PROTECTION

NOTE

DIMENSIONS SHOWN ARE APPROXIMATE AND ARE SUBJECT TO MINOR DEVIATIONS AS MAY OCCUR OR BE NECESSARY IN CONSTRUCTION.
MINOR DETAILS NOT SHOWN.

1. AIR OUTLET WITH SHUT-OFF VALVE LOCATED DS PUMP PANEL
2. BATTERY CHARGER LOCATED IN COMPARTMENT LS3
3. BATTERY CHARGE INDICATOR LOCATED ON DRIVER'S SEAT RISER
4. DUAL L.E.D. LIGHT STRIPS LOCATED IN HOSE BED
5. ONE FULL WIDTH/DEPTH ADJUSTABLE SHELF IN COMPARTMENT LS2, RS2, & RS3 THREE IN LS1, LS3, & RS1
6. ONE FLOOR MOUNTED SLIDE-OUT TRAY IN COMPARTMENT LS3, RS1, & B1
7. SHORELINE RECEPTACLE KUSSMAUL SUPER AUTO-EJECT LOCATED ON DS PUMP PANEL
8. ATKINSON DYNAMICS ADSF-25-Z SPEAKER LOCATED ON DS PUMP PANEL

REV	DATE	BY	CH
5	01JUN20	MMF	PPE
4	03MAR20	MMF	PPE
3	28FEB20	MMF	PPE
2	16JAN20	MMF	PPE
1	31OCT19	MMF	CDU

CHASSIS DATA
MAKE: PIERCE
MODEL: ENFORCER

Pierce MANUFACTURING INC.

TITLE: 1500-D-650P, 630 WATER 20 FOAM, 152" BODY, FDLER (2) XLAYS, LADDERS BTWN TANK AND SS, BOOSTER REELS

FOR: LODI FIRE DEPARTMENT, LODI, CALIFORNIA

DWG NO.: 34413AD

JOB NO.	34413
SCALE	1:24
DATE	
DRAWN BY	MMF 220CT19
CHECKED BY	CDU 250CT19
SHEET SIZE	D
SHEET NO.	1 OF 1

View File Created 02-JUN-2020 13:13:59