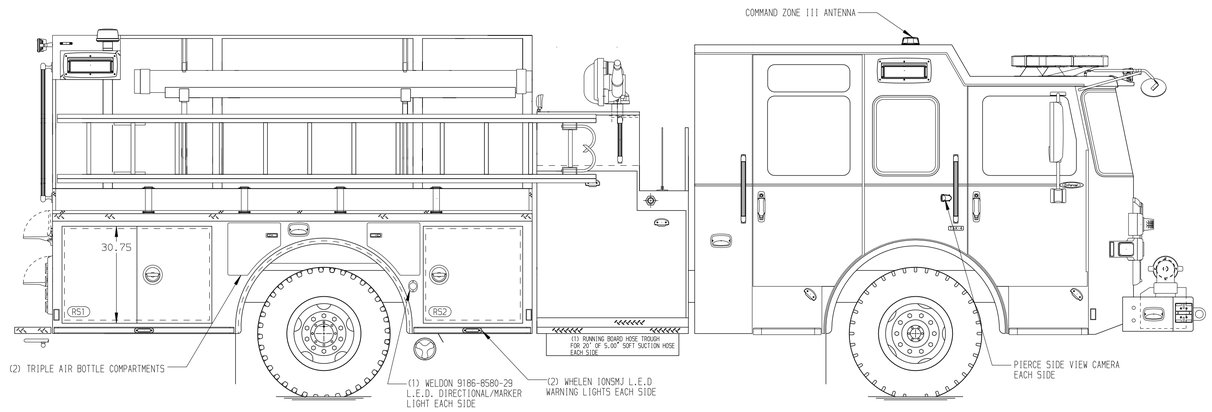

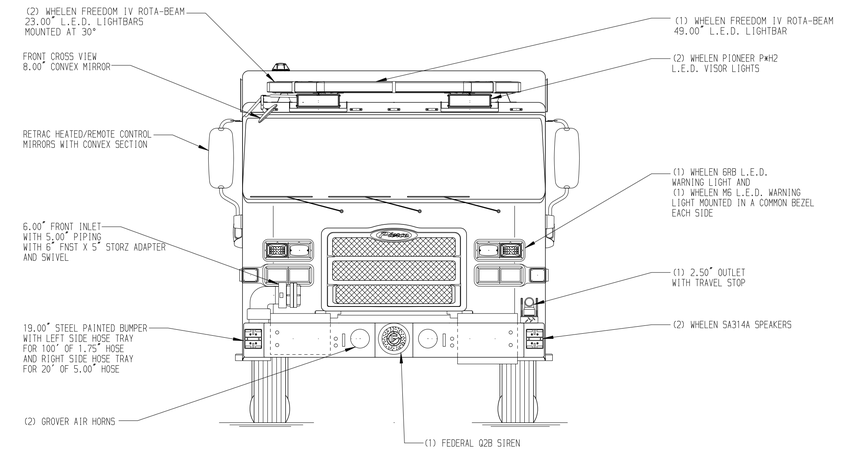

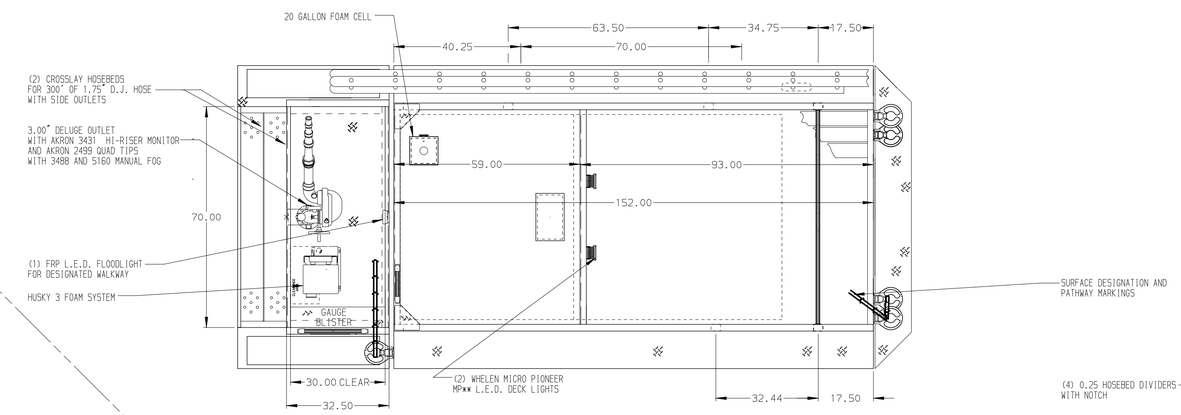

HOSEBED CAPACITIES

1. 300' OF 1.75" HOSE OVER 500' OF 2.50" HOSE
2. 600' OF 2.50" HOSE
3. 600' OF 3.00" HOSE
4. 1100' OF 5.00" HOSE
5. 300' OF 1.75" HOSE OVER 500' OF 2.50" HOSE

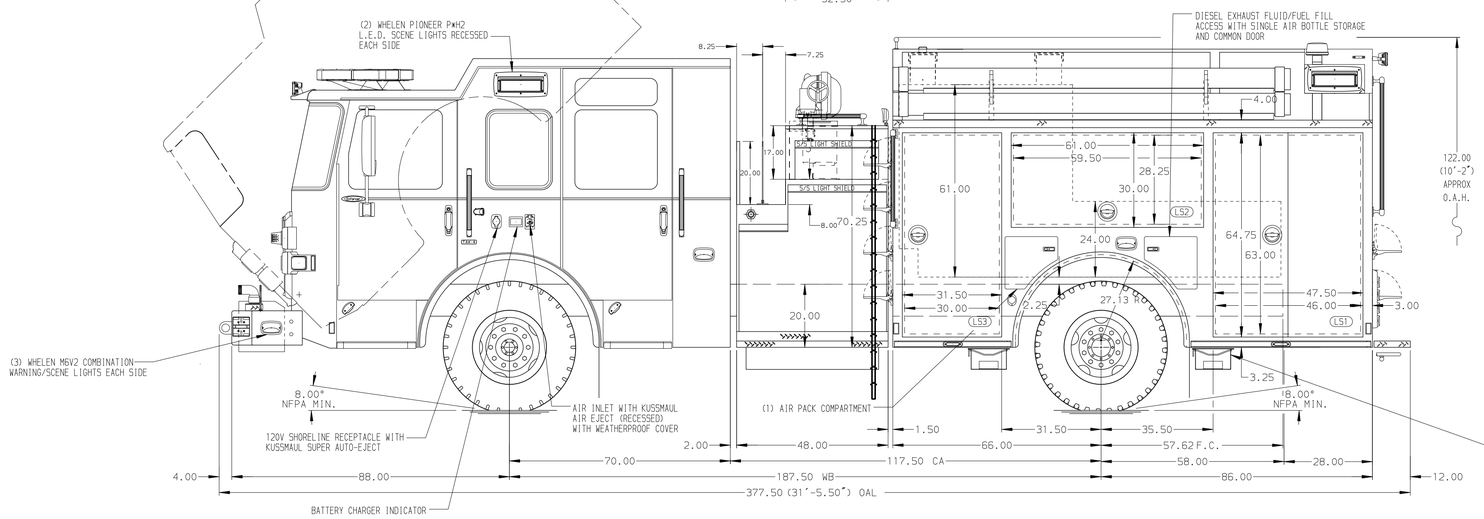

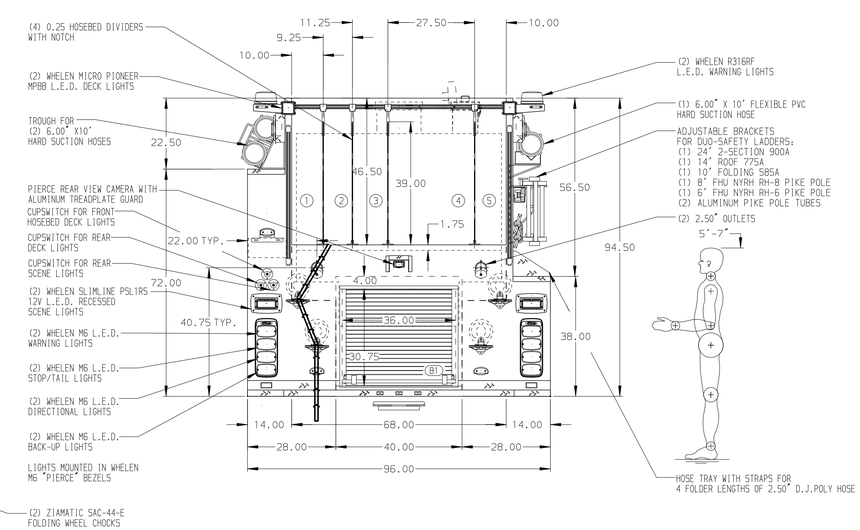

ALUMINUM BODY

MAXIMUM O.A.L. 384.00"

SIDE ROLL AND FRONTAL IMPACT PROTECTION

NOTE

DIMENSIONS SHOWN ARE APPROXIMATE AND ARE SUBJECT TO MINOR DEVIATIONS AS MAY OCCUR OR BE NECESSARY IN CONSTRUCTION.
MINOR DETAILS NOT SHOWN.

1. BATTERY CHARGER BEHIND THE DRIVER'S SEAT
2. REVERSED HINGED DOOR ON LS3
3. DRIP PAN GUARD FOR ROLL-UP DOOR IN B1
4. PULL STRAPS FOR DOORS IN LS2
5. ONE FULL WIDTH/DEPTH ADJUSTABLE SHELF IN LS1 AND LS3
6. ONE ADJUSTABLE SLIDE-OUT TRAY IN LS3
7. ONE FLOOR MOUNTED SLIDE-OUT TRAY IN LS1, B1, RS1, AND RS2
8. PAC TRAC ON THE REAR WALL OF LS1, LS2, AND LS3
9. FRC WLA 300-B00 WATER LEVEL GAUGE ON THE RS PUMP PANEL
10. ONE 120V 6-PLACE RECEPTACLE STRIP ON THE RIGHT SIDE OF THE MOUNTING PLATE
11. ONE 120 NEMA DUPLEX RECEPTACLE ON THE REAR WALL OF THE CREW CAB OVER THE SEATS
12. ONE 120V 6-PLACE RECEPTACLE STRIP IN LS1 AND LS3
13. S/S SCUFFPLATE ON THE RIGHT SIDE REAR BODY CORNER
14. S/S SCUFFPLATE ON THE TOP FLANGE OF THE PUMP HOUSE
15. 4-WAY SCUFFPLATE ON THE FRONT OUTSIDE CORNERS OF THE THE BODY UPPER SIDE SHEET
16. IRONSLOK BRACKET IN CAB

REV	DATE	BY	CH
7	03FEB20	LST	CWI
6	08JAN20	BST	PPE

CHASSIS DATA
MAKE: PIERCE
MODEL: ENFORCER

Pierce MANUFACTURING INC.

TITLE: 1750-D-1020P, 1000 GAL OF WATER W/ 20 GAL FOAM CELL 152" BODY, LADDER BRACKETS, DELUGE
FOR: GOSHEN FIRE DISTRICT GOSHEN, NEW YORK
DWG NO.: 34533AD

JOB NO.	34533
SCALE	1:24
DATE	
DRAWN BY	LST
12NOV19	
CHECKED BY	CDU
14NOV19	
SHEET SIZE	D
SHEET NO.	1 OF 1

View File Created 07-FEB-2020 07:01:33