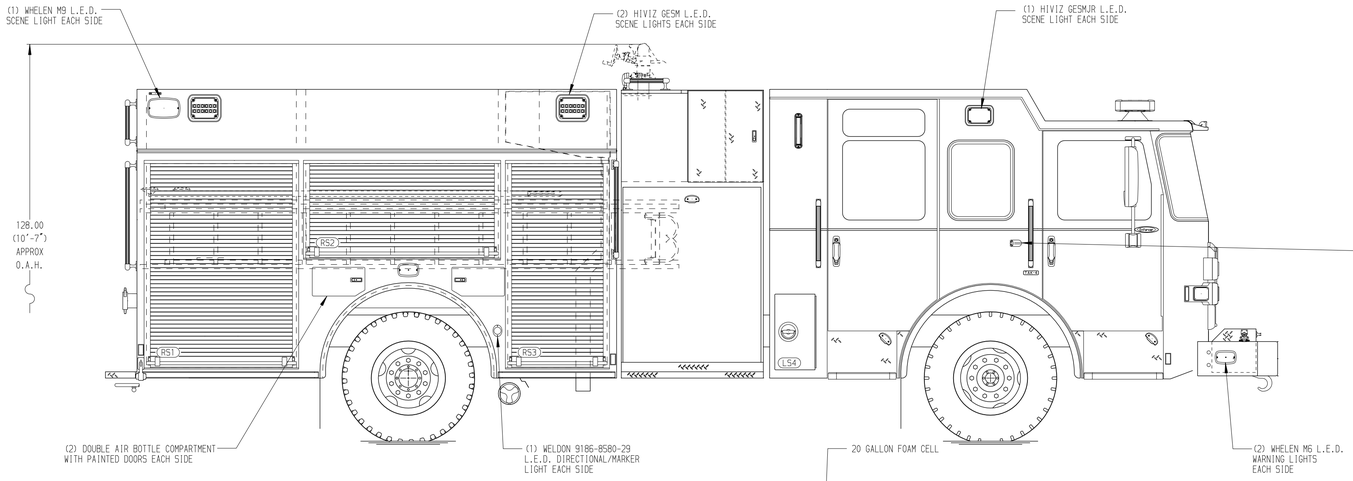

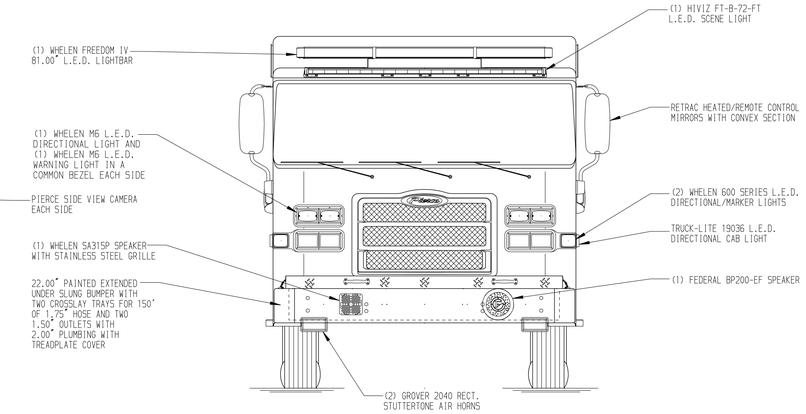

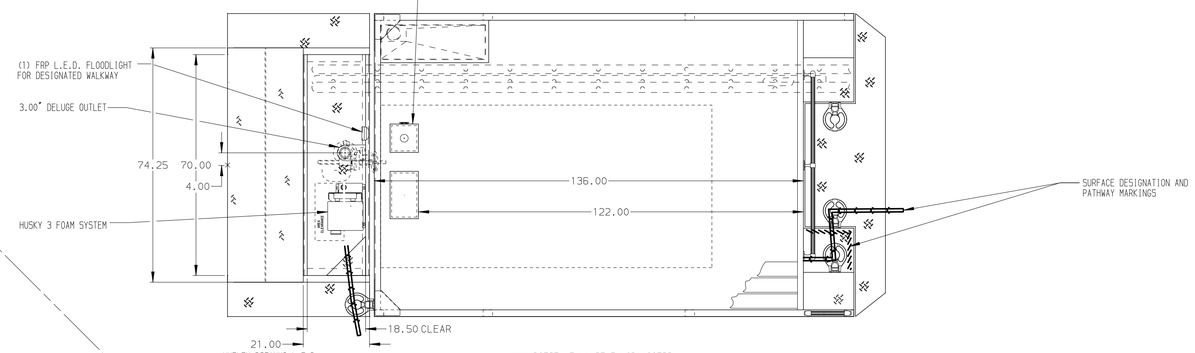

HOSEBED CAPACITIES

1. 1050' OF 3.00" DJ HOSE
2. 800' OF 5.00" DJ HOSE

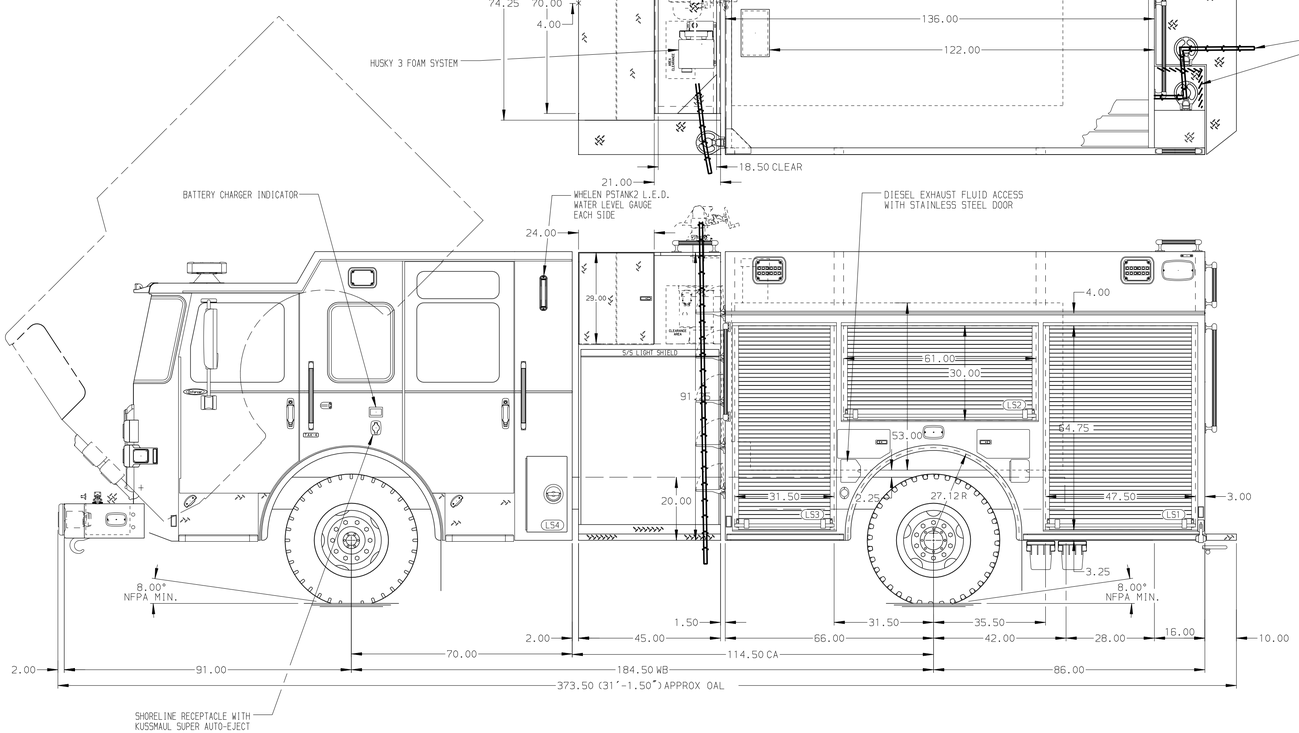

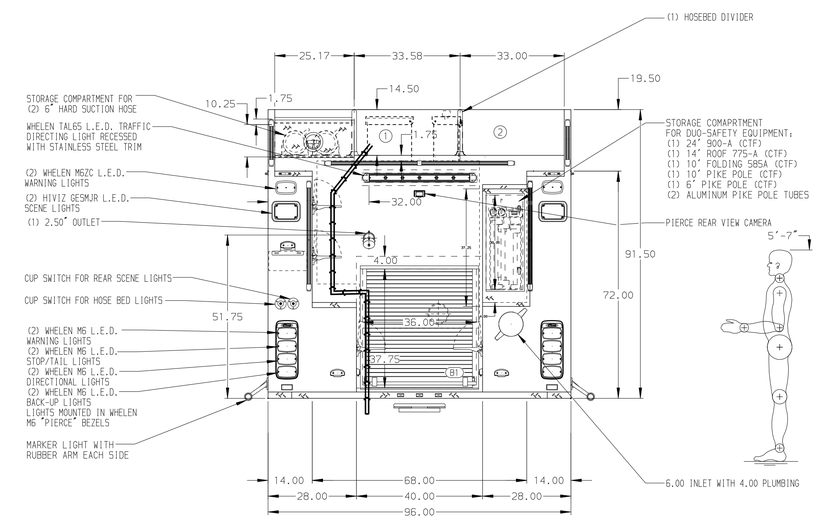

ALUMINUM BODY

NOTE

DIMENSIONS SHOWN ARE APPROXIMATE AND ARE SUBJECT TO MINOR DEVIATIONS AS MAY OCCUR OR BE NECESSARY IN CONSTRUCTION.
MINOR DETAILS NOT SHOWN.

1. BATTERY CHARGER LOCATED IN COMPARTMENT LS3
2. DUAL L.E.D. LIGHT STRIPS LOCATED IN HOSE BED
3. ONE FULL WIDTH/DEPTH ADJUSTABLE SHELF IN COMPARTMENT RS2; TWO IN LS1, LS3, RS1, AND RS3
4. SWING-OUT TOOL BOARD WITH PEGBOARD PATTERN IN COMPARTMENT RS2
5. OIL DRY HOPPER OVER COMPARTMENT RS3

REV	DATE	BY	CH
7	10AUG20	KLE	CSH
6	04JUN20	SHD	PJP
5	23APR20	KLE	PJP
4	24JAN20	KLE	NPE

CHASSIS DATA
MAKE: PIERCE
MODEL: ENFORCER

Pierce MANUFACTURING INC.

TITLE: 1500-D-1000P, 980G WATER W/20G FOAM, 152" FH FDLER LADDERS BTWN TANK & SS, DELUGE, XLAYS UNDRSLNG BMPR
FOR: BENNET FIRE AND RESCUE, BENNET, NEBRASKA
DWG NO.: 34556AD

JOB NO.	34556
SCALE	1:24
DATE	
DRAWN BY	KLE 20JAN20
CHECKED BY	NPE 20JAN20
SHEET SIZE	D
SHEET NO.	1 OF 1

View File Created 10-AUG-2020 13:20:52