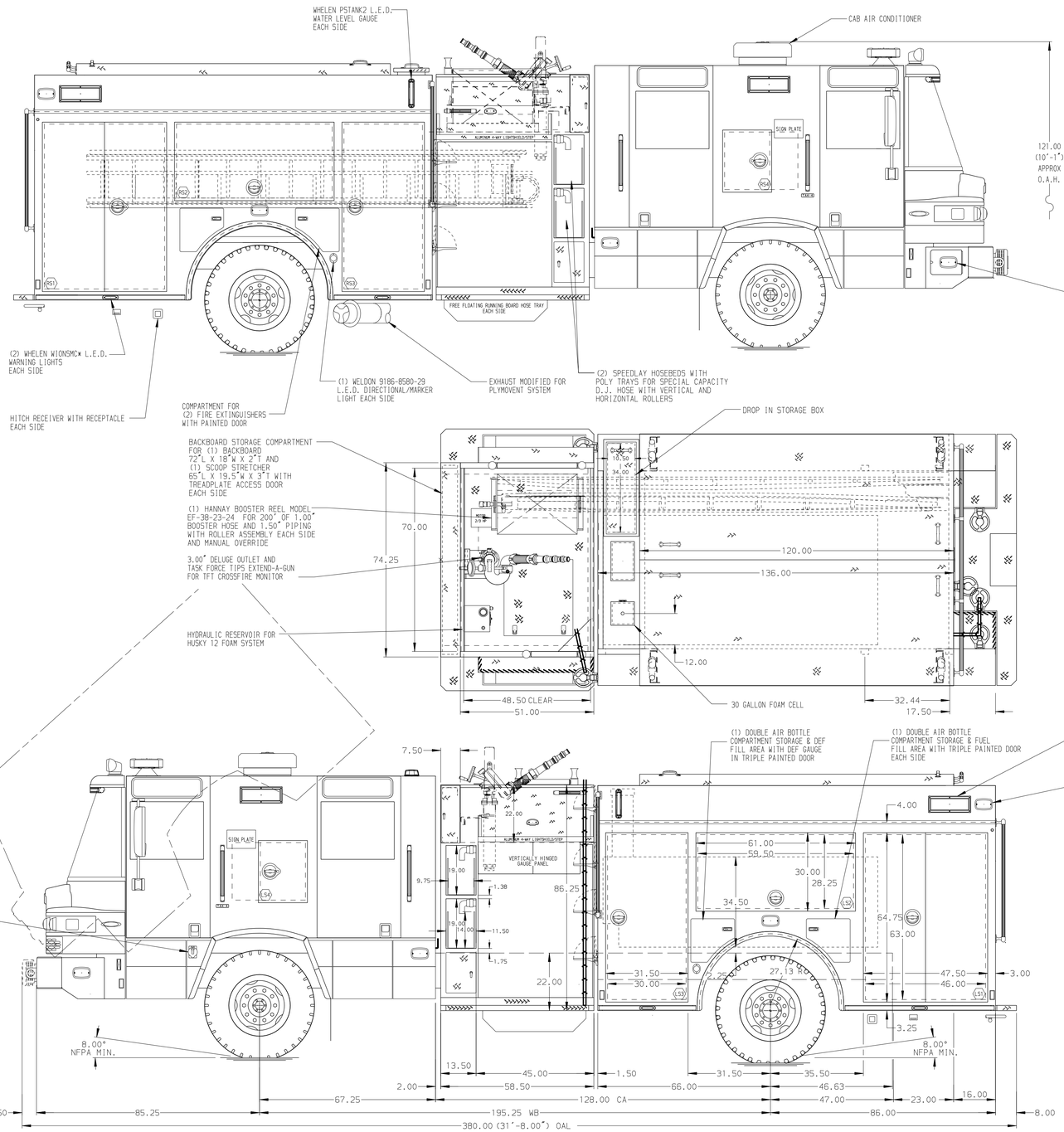

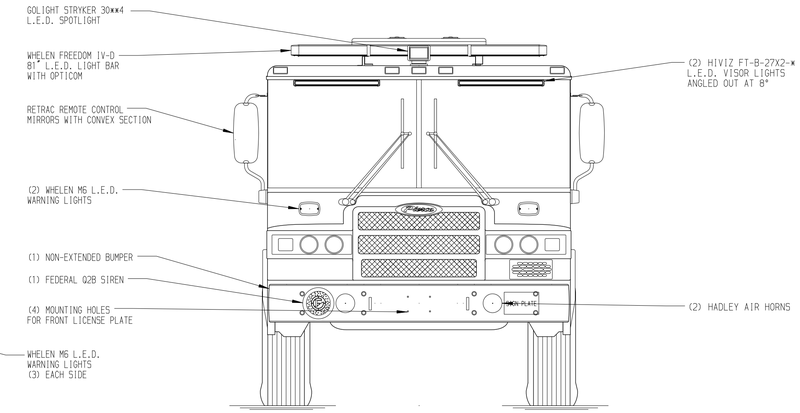

HOSEBED CAPACITIES

1. 400' OF 2.50" D.J. POLY
2. 200' OF 2.50" KEY HOSE
3. 150' OF 2.50" KEY HOSE
4. 300' OF 1.75" KEY HOSE
5. 800' OF 5.00" D.J. POLY
6. 300' OF 1.75" D.J. POLY
7. 50' OF 1.75" D.J. POLY

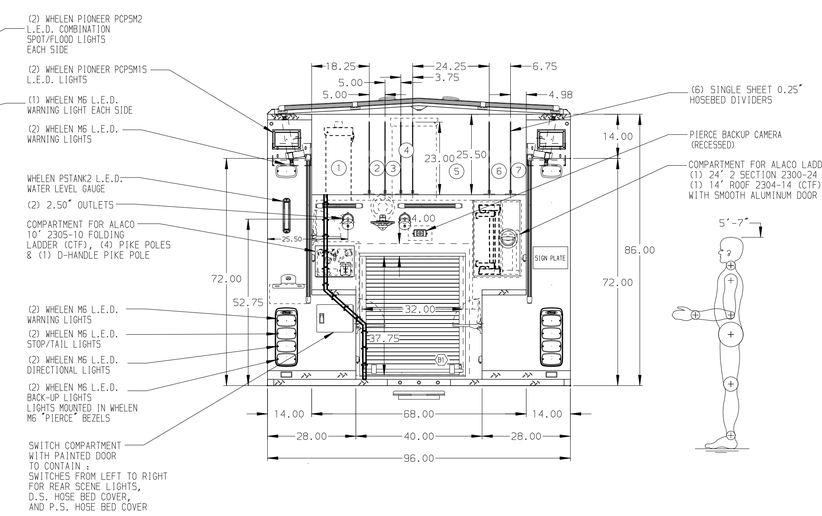

GALVANNEAL

SIDE ROLL AND FRONTAL IMPACT PROTECTION

DIMENSIONS SHOWN ARE APPROXIMATE AND ARE SUBJECT TO MINOR DEVIATIONS AS MAY OCCUR OR BE NECESSARY IN CONSTRUCTION.
MINOR DETAILS NOT SHOWN.

1. ALUMINUM 4-WAY ON CAB ROOF
2. BATTERY CHARGE INDICATOR LOCATED ON DRIVER'S SEAT RISER
3. PULL STRAP ON DOOR IN COMPARTMENTS LS2 & RS2
4. REVERSED HINGED DOOR ON COMPARTMENT LS3
5. S/STL SCUFFPLATE ON BOTTOM EDGE OF DOOR FRAMING OF COMPARTMENTS LS1, LS2, LS3, RS1, RS2 & RS3
6. DRIP PAN GUARD FOR ROLL-UP DOOR LOCATED IN COMPARTMENT B1
7. ONE FULL WIDTH ADJUSTABLE SHELF LOCATED IN COMPARTMENT B1 TWO IN LS1, RS1, & RS3
8. ONE ADJUSTABLE SLIDE-OUT TRAY IN COMPARTMENT LS1 & RS1
9. ONE FLOOR MOUNTED SLIDE-OUT TRAY IN COMPARTMENT RS1
10. RESPONSE READY FOUR DRAWER CABINET IN COMPARTMENT LS3
11. PAC TRAC ON THE REAR WALL OF COMPARTMENT RS3
12. PARTITION BETWEEN COMPARTMENTS LS1/B1 & RS1/B1
13. ONE VERTICAL PARTITION IN COMPARTMENT LS1
14. 4-WAY ALUMINUM ON THE FLOOR OF COMPARTMENT LS1, LS3, RS3 & B1
15. AIR BOTTLE HOLDER WITH TRACKS IN COMPARTMENT LS2
16. WHEEL CHOCK MOUNTING BRACKETS PROVIDED BY FIRE DEPARTMENT
17. AIR INLET W/DISCONNECT COUPLING LOCATED ON D.S. SEAT RISER
18. AIR OUTLET W/SHUT OFF VALVE LOCATED ON D.S. & P.S. PUMP PANELS
19. BATTERY CHARGER LOCATED IN CREW CAB SEAT RISER
20. ONE ADJUSTABLE FULL WIDTH/DEPTH SHELF IN LS3

REV	DATE	BY	CH
7	11NOV20	MMF	BSE
6	20OCT20	MMF	JBL
5	03SEP20	SPE	JBL
4	04AUG20	SPE	JBL
3	26MAY20	MMF	MSA

CHASSIS DATA
MAKE: PIERCE
MODEL: QUANTUM

Pierce MANUFACTURING INC.

TITLE: 1500-D-500 W/30G FOAM,152",FULL HEIGHT,FDLER (2) SPD-LAYS,DELUGE,HOSE REEL
FOR: FREMONT FIRE DEPARTMENT FREMONT, CALIFORNIA
DWG NO.: 34590AD

JOB NO.	34590 (01-02)
SCALE	1:24
DATE	
DRAWN BY	MMF
22JAN20	
CHECKED BY	SMA
24JAN20	
SHEET SIZE	D
SHEET NO.	1 OF 1

View File Created 28-JAN-2021 12:27:17