PUMPER

BODY
Long Aluminum 2nd Gen Pumper

CHASSIS
Enforcer Chassis

CHASSIS

AXLE, FRONT, CUSTOM
20,000 lb Dana Axle

AXLE, REAR
27,000 lb Dana Axle

ENGINE
450 HP Cummins L9 Engine

TRANSMISSION
Allison 5th Gen, 3000 EVS P

BUMPER
22" Extended Painted Steel

CAB
6010 Enforcer Cab

BODY

WATER TANK
1000 Gallon Poly Water Tank

COMPT, PUMPER, REAR
37.75" FF Rollup Rear Compt, 25.88" Deep Flush Rear

COMPT, PUMPER, LEFT SIDE
161" Rollup Full Height & Depth Front & Rear

COMPT, PUMPER, RIGHT SIDE
161" Rollup Full Height Front & Rear FDLER

FIRE SUPPRESSION

PUMPHOUSE
45" Control Zone Top Mount

PUMP
1500 GPM Hale QMAX

CROSSLAYS, 1.50"
1.50" Crosslays Not Required

CROSSLAYS, 2.50"
2.50" Crosslay Not Required

SPEEDLAYS
(2) 1.50" Standard Capacity

GENERATOR
Generator Not Required

Foam System
Foam System Not Required

Foam Cell
Foam Cell Not Required

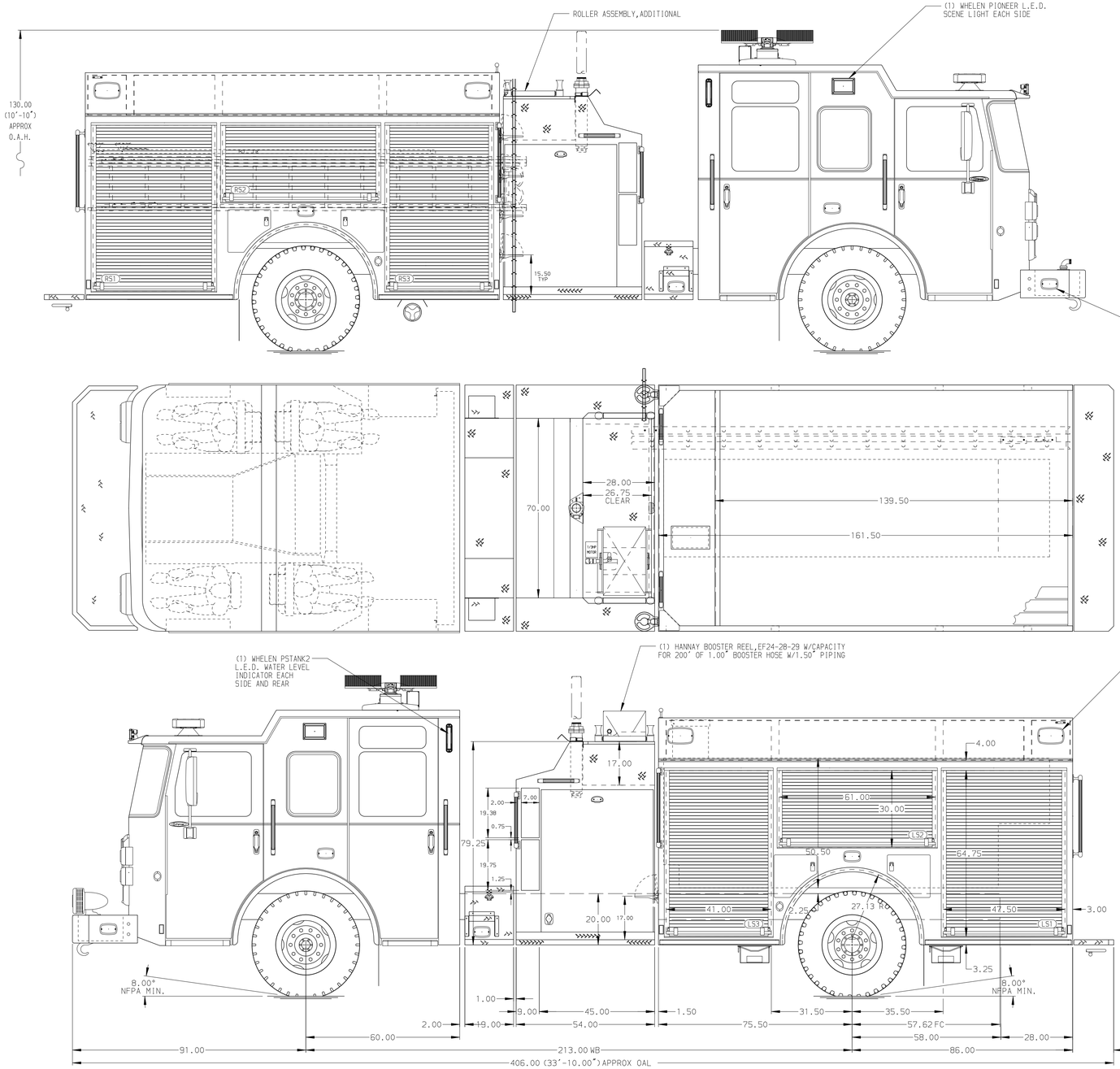

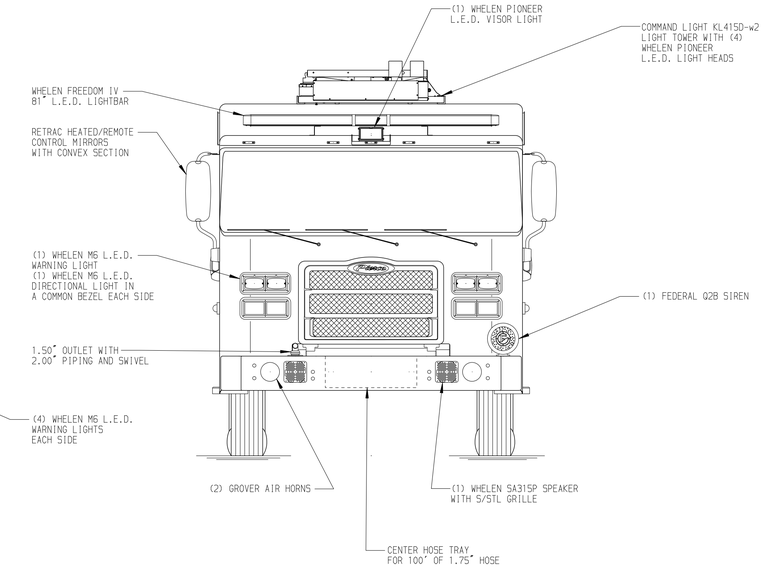

HOSEBED CAPACITY

BED 1
400' OF 2.50" D.J. POLY HOSE

BED 2
1000' OF 5.00" D.J. POLY HOSE

BED 3
300' OF 2.50" D.J. POLY HOSE

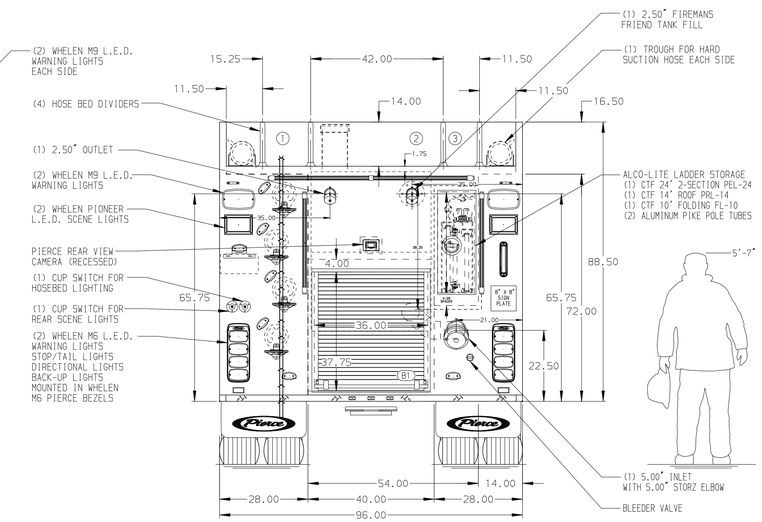

NOTE
DIMENSIONS SHOWN ARE APPROXIMATE AND ARE SUBJECT TO MINOR DEVIATIONS AS MAY OCCUR OR BE NECESSARY IN CONSTRUCTION.
MINOR DETAILS NOT SHOWN.

REV	DATE	BY	CH
3	23JUN20	MMF	PPE
2	21MAY20	COL	PPE

CHASSIS DATA
MAKE: PIERCE
MODEL: ENFORCER

Pierce MANUFACTURING INC.

TITLE: PIERCE PUMPER APPROVAL DRAWING
FOR: DORCHESTER COUNTY FIRE SERVICE, DORCHESTER, SOUTH CAROLINA
DWG NO.: 34649AD

JOB NO.	34649 01-04
SCALE	1:24
DRAWN BY	COL
DATE	11DEC19
CHECKED BY	KBO
DATE	11DEC19
SHEET SIZE	D
SHEET NO.	1 OF 1

View File Created 20-JUL-2020 07:56:34