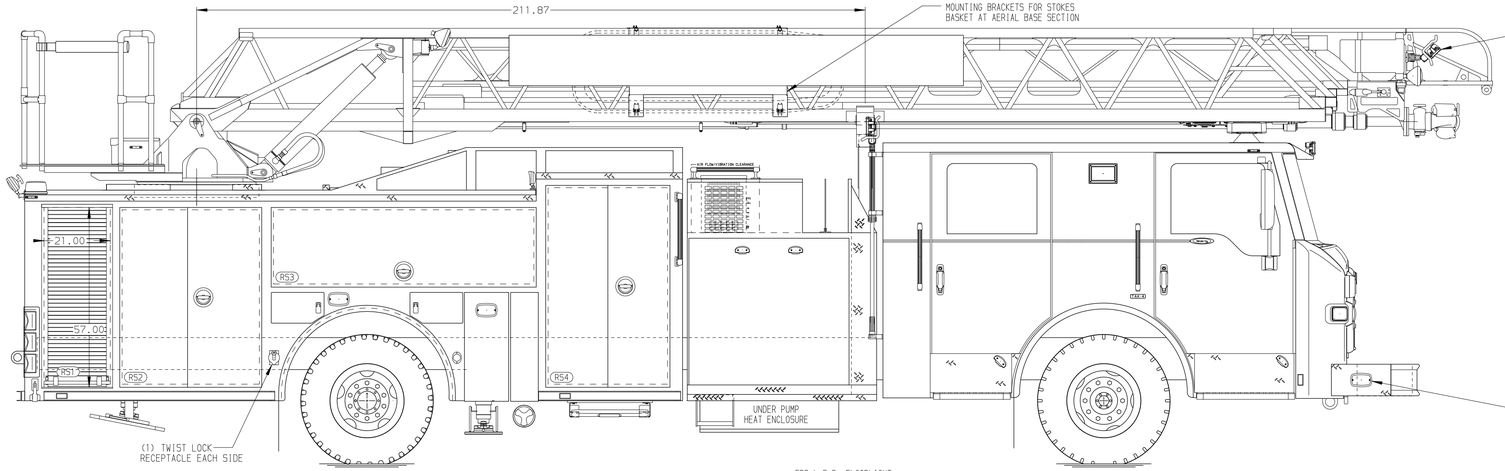

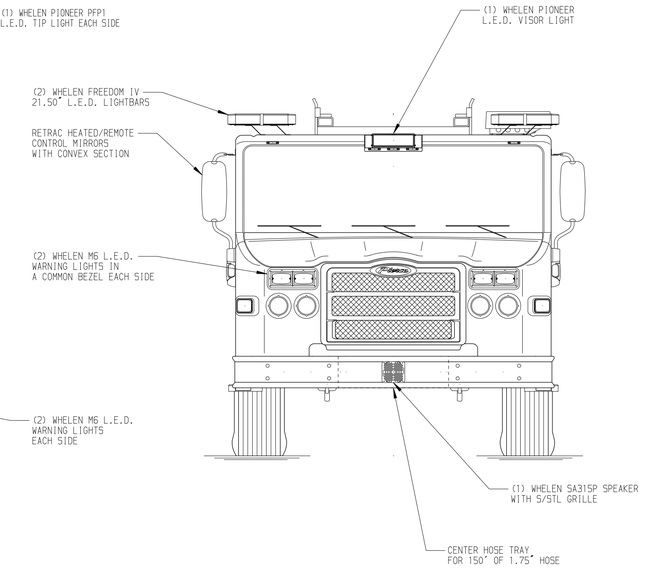

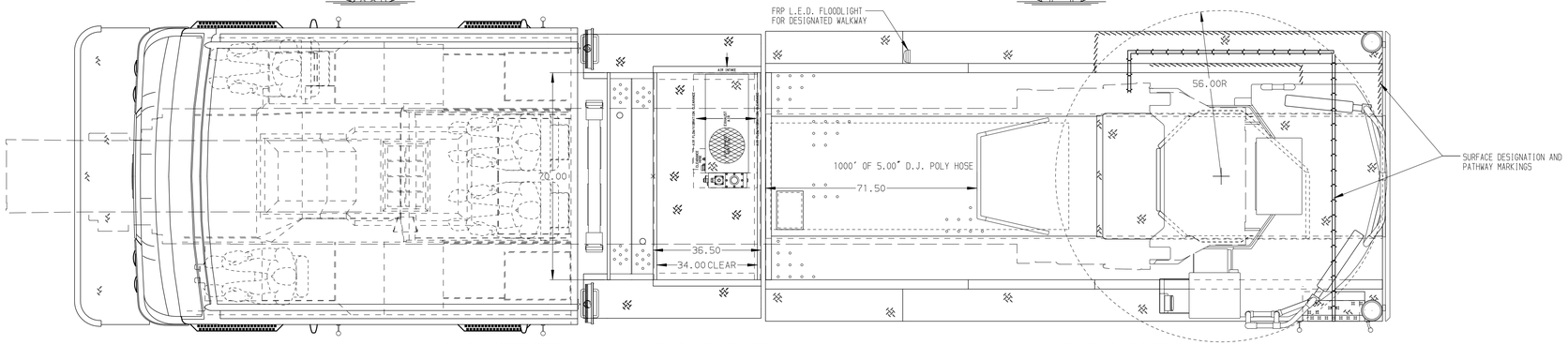

BODY	WATER TANK
107' ASL Aluminum Body	500 Gallon Poly Water Tank
COMPT,LEFT SIDE FRONT	**Foam System**
Full Height Lap Forward	Foam System Not Required
COMPT,LEFT SIDE REAR	**Foam Cell**
Full Height Lap Rearward	Foam Cell Not Required
COMPT,RIGHT SIDE FRONT	
Full Height Lap Forward	
COMPT,RIGHT SIDE REAR	
Full Height Lap Rearward	

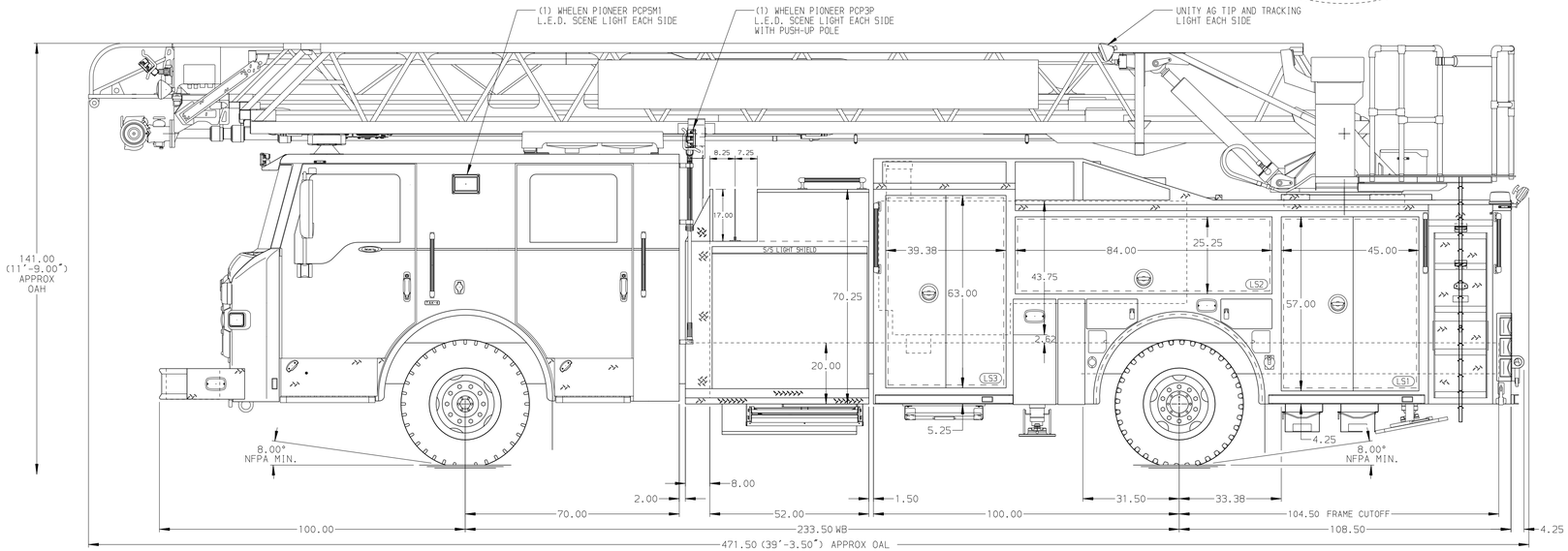

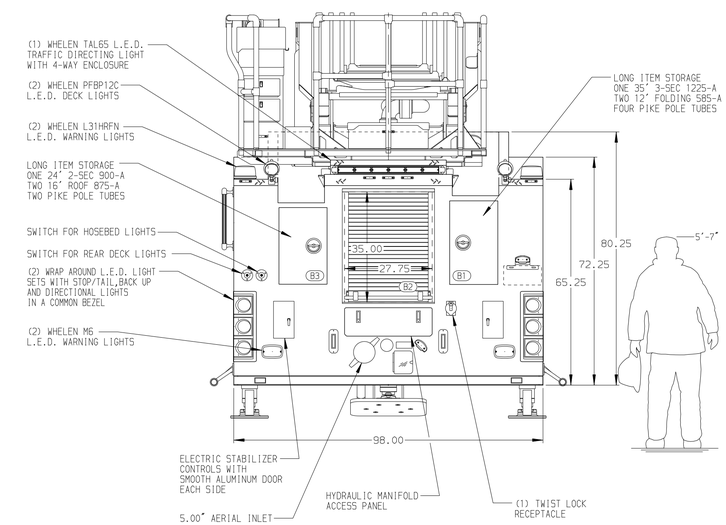

CHASSIS	CAB	AXLE,FRONT,CUSTOM	TRANSMISSION	PUMPHOUSE	CROSSLAYS,1.50"	SPEEDLAYS	SAFETY
Velocity Chassis (Big Block)	7000 Velocity FR Cab	24,000 Lb TAK-4 Axle	Allison 5th Gen, 4000 EVS P	52" Control Zone Side Mount	(2) 1.50" Standard Capacity	Speedlays Not Required	Side Roll and Frontal Impact Protection
ENGINE	**BUMPER**	**AXLE,REAR**		**PUMP**	**CROSSLAYS,2.50"**	**GENERATOR**	
505 HP DD13 Engine	22" Extended Stainless Steel	33,500 Lb Meritor Axle		1500 GPM Waterous CSU	2.50" Crosslay Not Required	Harrison 6kW MCR Hydraulic	

NOTE

DIMENSIONS SHOWN ARE APPROXIMATE AND ARE SUBJECT TO MINOR DEVIATIONS AS MAY OCCUR OR BE NECESSARY IN CONSTRUCTION.
MINOR DETAILS NOT SHOWN.

1. ONE 1.50 OUTLET WITH 2.00 PIPING AND SWIVEL LOCATED IN CENTER BUMPER TRAY
2. SHORELINE RECEPTACLE WITH KUSSMAUL SUPER AUTO-EJECT LOCATED ON DRIVER SIDE OF THE CAB
3. AIR INLET WITH DISCONNECT COUPLING IN THE DRIVER SIDE STEPWELL
4. BATTERY CHARGER LOCATED IN COMPARTMENT PER SHOP ORDER
5. BATTERY CHARGE INDICATOR LOCATED NEAR DRIVER SEAT RISER WITH BRACKET
6. FIVE ADJUSTABLE SHELVES IN COMPARTMENTS PER SHOP ORDER
7. TWO FLOOR MOUNTED SLIDE-OUT TRAYS IN COMPARTMENTS PER SHOP ORDER
8. ONE SWING-OUT ALUMINUM TOOL BOARD IN COMPARTMENT PER SHOP ORDER
9. ONE VERTICAL DIVIDER IN COMPARTMENT PER SHOP ORDER
10. TWO ALUMINUM PEGBOARD WITH TRACKS ON THE SIDE WALLS OF COMPARTMENTS PER SHOP ORDER
11. CIRCUIT BREAKER PANEL IN COMPARTMENT PER SHOP ORDER
12. NON-RAISED AERIAL PEDESTAL
13. 1500 GPM HIGH FLOW WATERWAY
14. 120V DUPLEX RECEPTACLE AT THE AERIAL TIP
15. LIMITED RETRACTION NOT REQUIRED

REV	DATE	BY	CH
2	29FEB20	TKA	PJP
1	24JAN20	TKA	THS

CHASSIS DATA
MAKE: PIERCE
MODEL: VELOCITY

Pierce MANUFACTURING INC.

TITLE: 107' ASCENDANT AERIAL LADDER AND BODY ASSEMBLY
–
FOR: US ARMY
–
DWG NO.: 34686AD

JOB NO. 34686 01-02
SCALE 1:24
DRAWN BY TKA
DATE 03JAN20
CHECKED BY CRI
14JAN20
SHEET SIZE D
SHEET NO. 1 OF 1

View File Created 02-MAR-2020 08:51:01