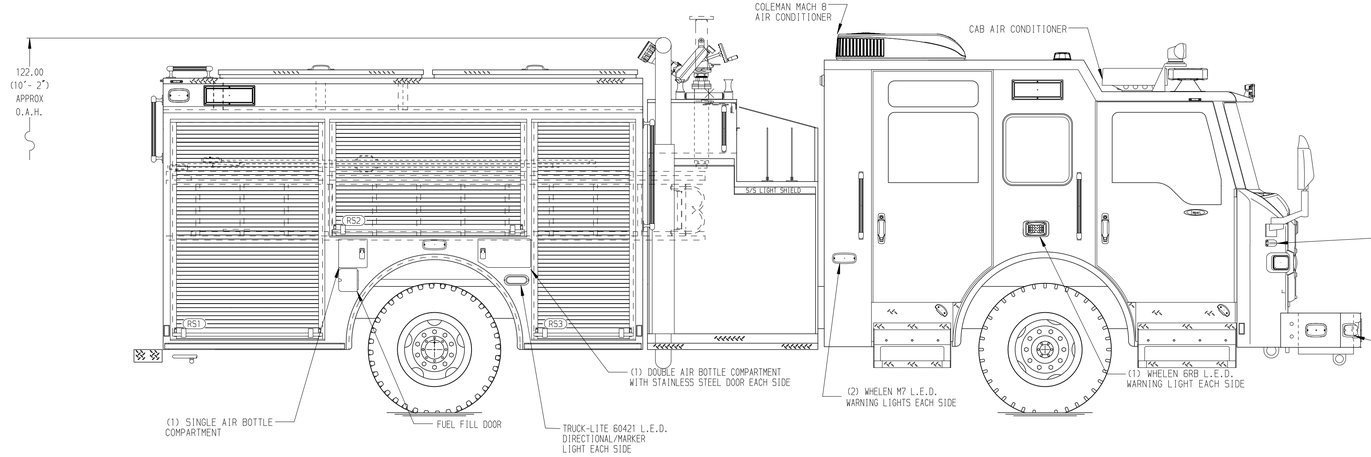

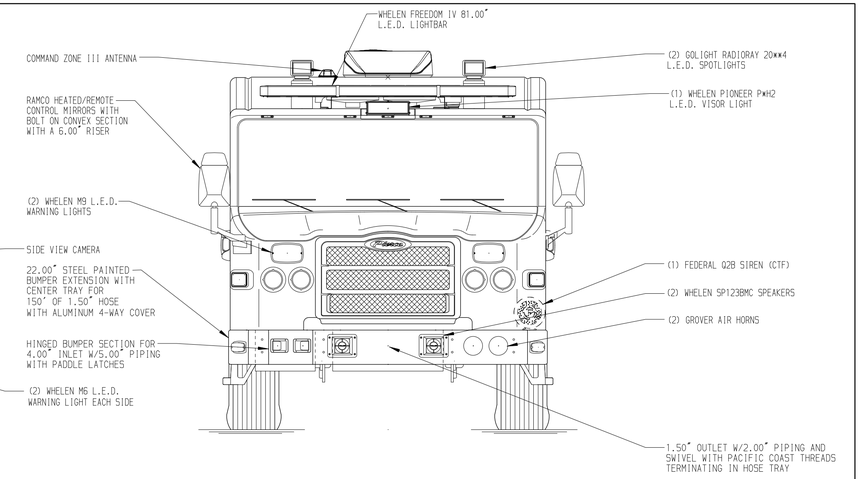

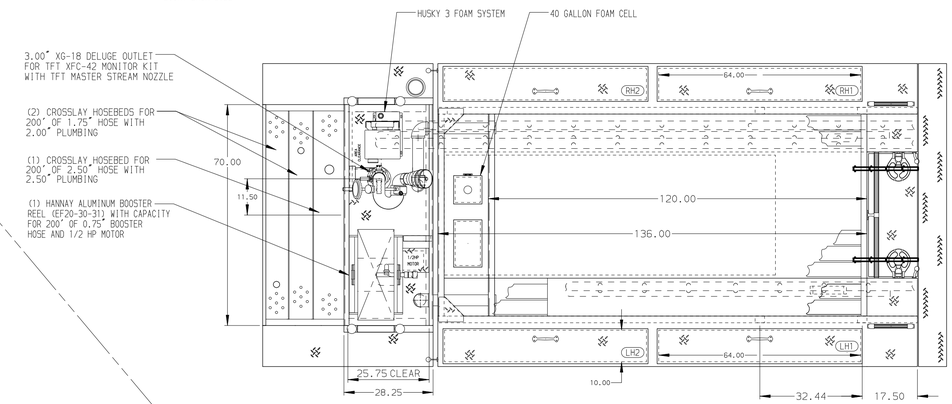

HOSEBED CAPACITIES

1. 200' OF 2.50" D.J. POLYESTER HOSE
2. 1000' OF 4.00" D.J. POLYESTER HOSE
3. 200' OF 2.50" D.J. POLYESTER HOSE

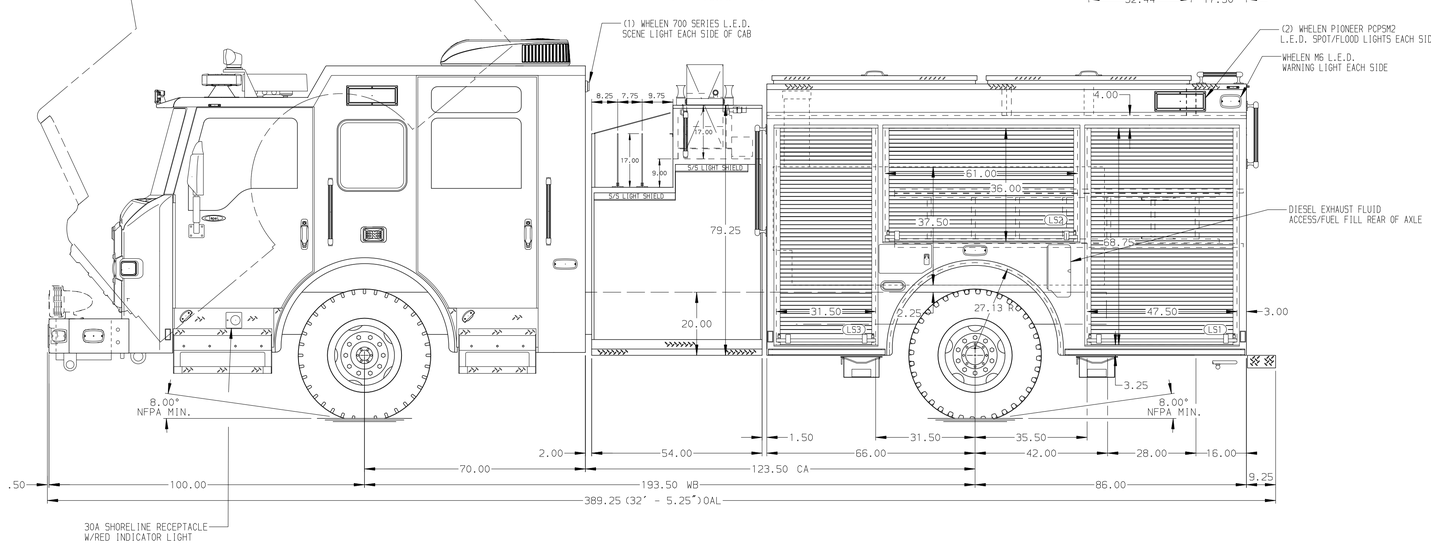

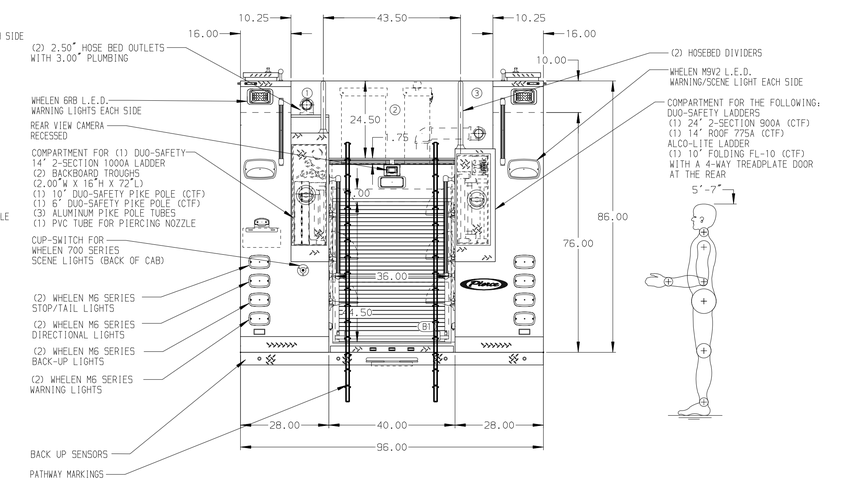

ALUMINUM BODY

SIDE ROLL AND FRONTAL IMPACT PROTECTION

NOTE

DIMENSIONS SHOWN ARE APPROXIMATE AND ARE SUBJECT TO MINOR DEVIATIONS AS MAY OCCUR OR BE NECESSARY IN CONSTRUCTION.
MINOR DETAILS NOT SHOWN.

1. AIR INLET/OUTLET WITH DISCONNECT FITTING LOCATED ON DRIVER'S SIDE PUMP PANEL
2. BATTERY CHARGER LOCATED IN FORWARD PASSENGER'S SIDE HATCH COMPARTMENT
3. SUB-FEED CIRCUIT BREAKER PANEL IN COMPARTMENT LS3
4. DRIP PAN GUARD FOR ROLL-UP DOOR LOCATED LS1, LS2, LS3, RS1, RS2, RS3 & B1
5. PARTITION BETWEEN COMPARTMENTS LS1/B1 AND RS1/B1
6. ONE VERTICAL PARTITION IN COMPARTMENT LS3
7. ONE SLIDE-OUT TOOLBOARD IN COMPARTMENT LS3
8. ONE ADJUSTABLE FULL WIDTH/DEPTH SHELF WITH WELDED CORNERS IN COMPARTMENT LS1 & B1
9. TWO ADJUSTABLE FULL WIDTH/DEPTH SHELVES IN COMPARTMENT LS1, LS3, RS1 & RS3

REV	DATE	BY	CH
V	10APR20	KLE	MSA
V	10MAR20	KLE	MSA
V	20FEB20	KLE	MSA
V	17JAN20	KLE	MSA

CHASSIS DATA
MAKE: PIERCE
MODEL: IMPEL FR

Pierce MANUFACTURING INC.

TITLE: 1500-D-500 WATER/40 FOAM, 152" BODY, SIDE CONTROL CROSSLAYS, DELUGE, BOOSTER REEL, FOAM SYSTEM
FOR: PHOENIX FIRE DEPARTMENT, PHOENIX, ARIZONA
DWG NO.: 34711AD

JOB NO. 34711 (01-05)
SCALE 1:24
DATE
DRAWN BY KLE 08JAN20
CHECKED BY MSA 14JAN20
SHEET SIZE D
SHEET NO. 1 OF 1

View File Created 10-APR-2020 13:35:33