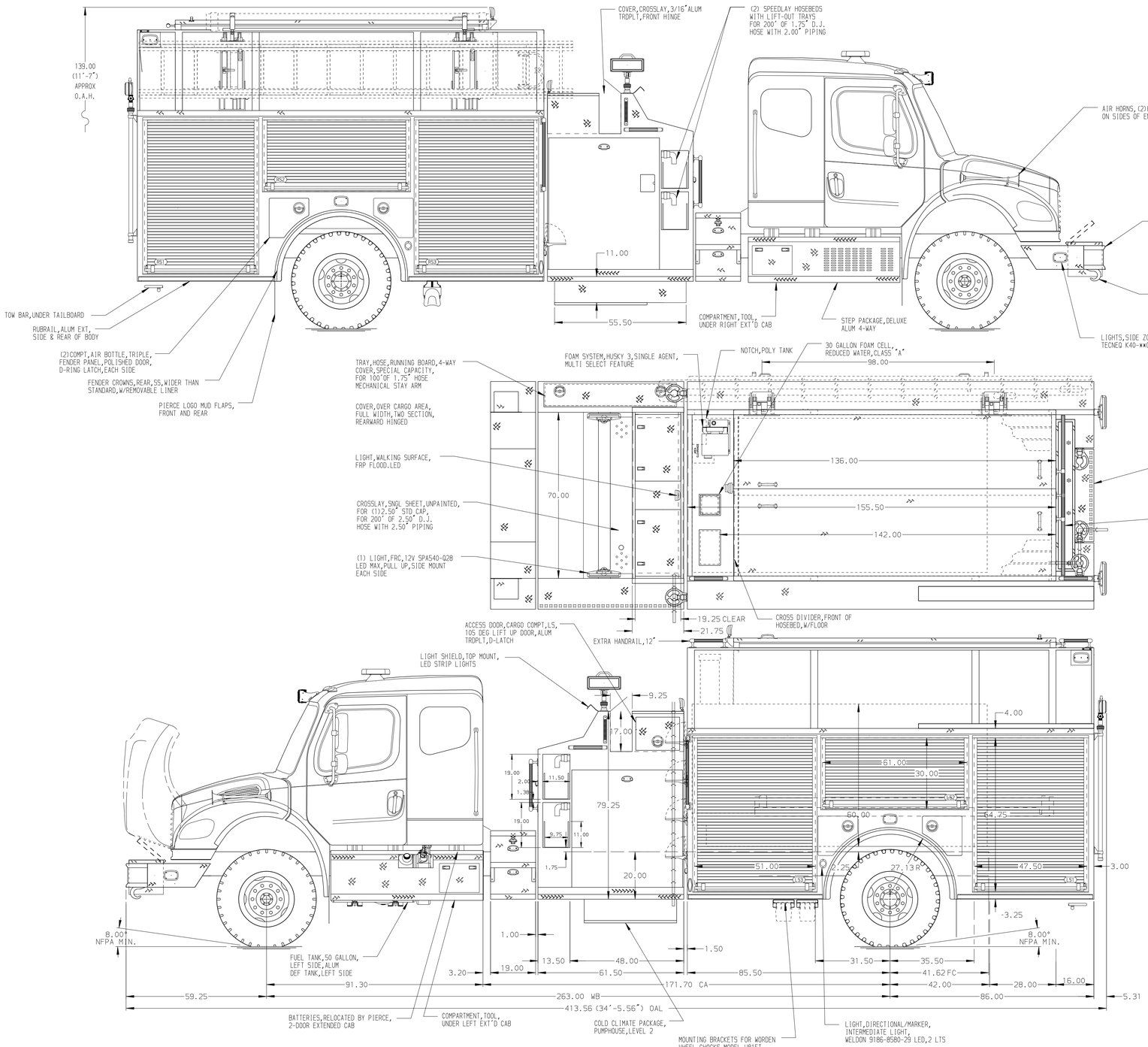

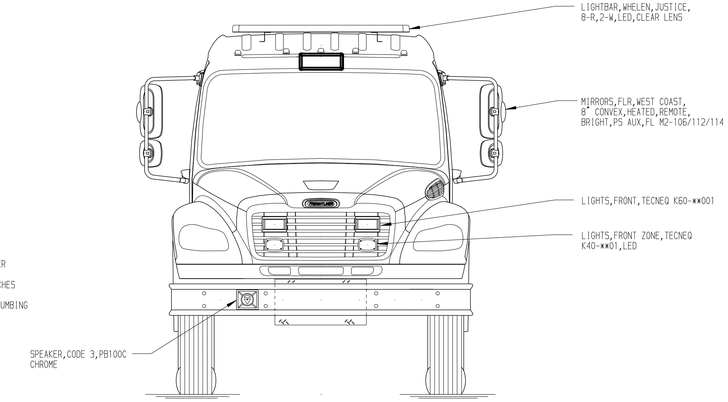

HOSEBED CAPACITIES

1. 600' OF 1.75" D.J. HOSE
2. 800' OF 2.50" D.J. HOSE
3. 1000' OF 4.00" D.J. HOSE

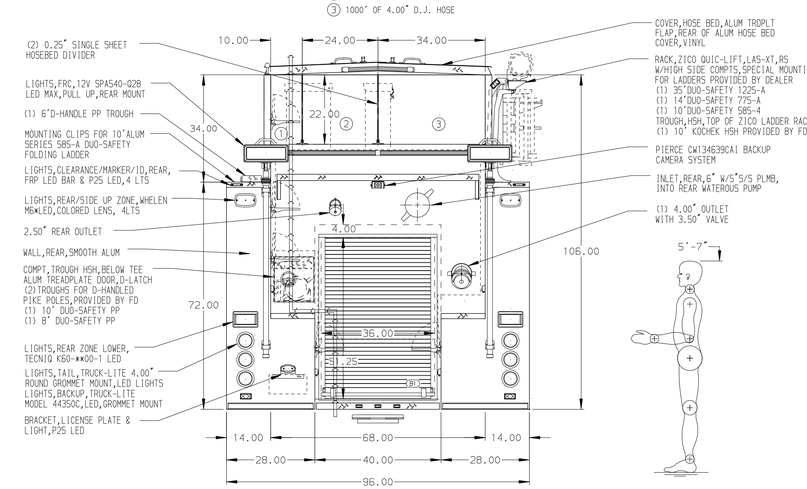

ALUMINUM BODY

NOTE

DIMENSIONS SHOWN ARE APPROXIMATE AND ARE SUBJECT TO MINOR DEVIATIONS AS MAY OCCUR OR BE NECESSARY IN CONSTRUCTION.
MINOR DETAILS NOT SHOWN.

REV	DATE	BY	CH
7	18AUG20	JLA	AJA
6	09JUL20	CRH	AJA

CHASSIS DATA	TITLE	1500-D-1470P,30G FOAM CELL,171"BODY,DS&PS FH FDLER 48"TP MNT W/19"WLKWY,(1)2.5"CROSSLAY,(2)1.5"SPEEDLAYS	
MAKE: FL	FOR	BIRNAMWOOD FIRE DEPARTMENT BIRNAMWOOD,WISCONSIN	
MODEL: M2-106	DWG NO.	34751AD	

Pierce MANUFACTURING INC.
BRADENTON, FLORIDA

JOB NO.	34751
SCALE 1:24	DATE
DRAWN BY JLA	13APR20
CHECKED BY RWI	17APR20
SHEET SIZE D	SHEET NO. 1 OF 1

View File Created 02-SEP-2020 09:45:10