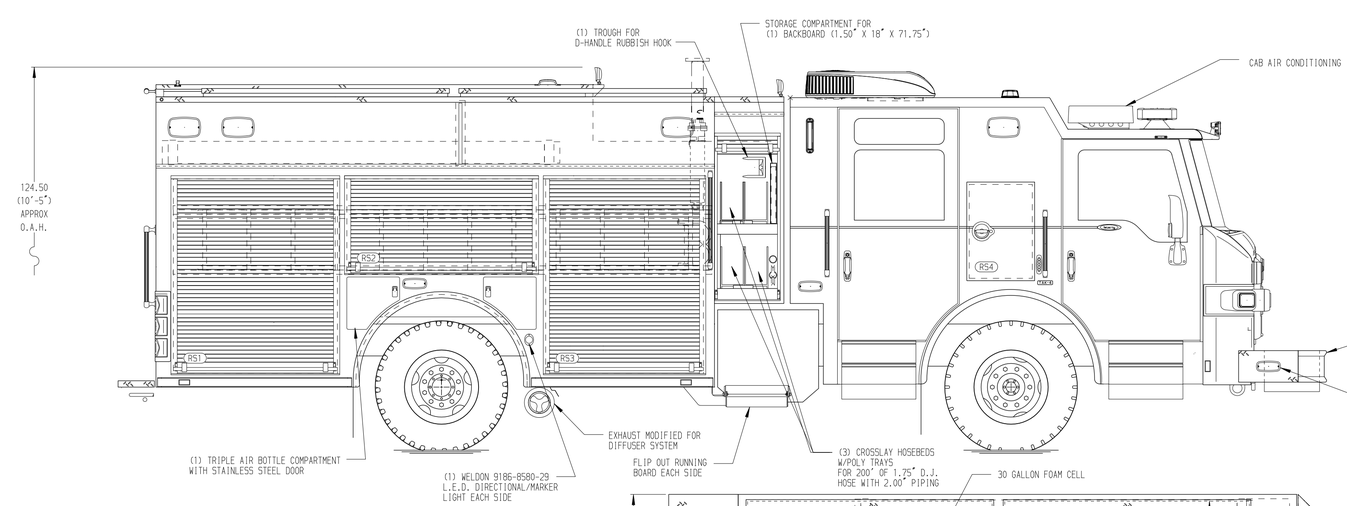

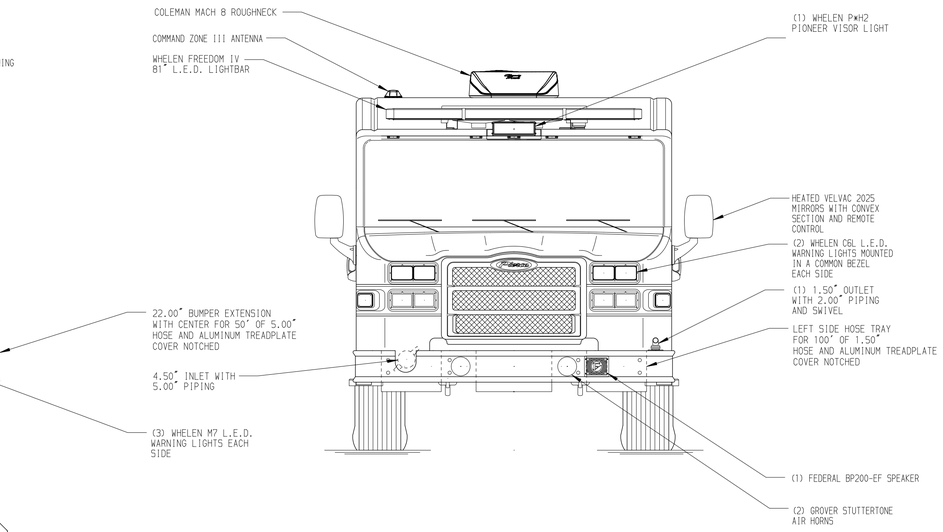

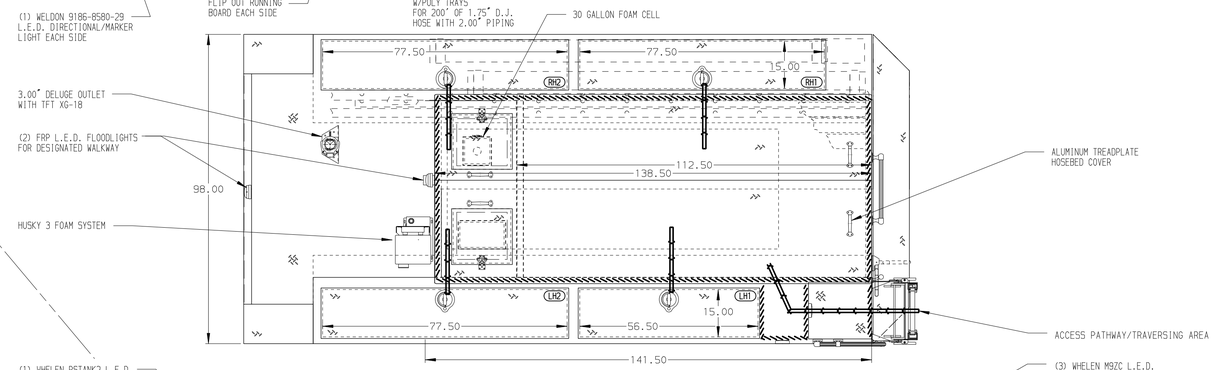

HOSEBED CAPACITIES

1. 600' OF 2.50" D.J. POLY HOSE
2. 600' OF 2.50" D.J. POLY HOSE
3. 750' OF 5.00" D.J. POLY HOSE

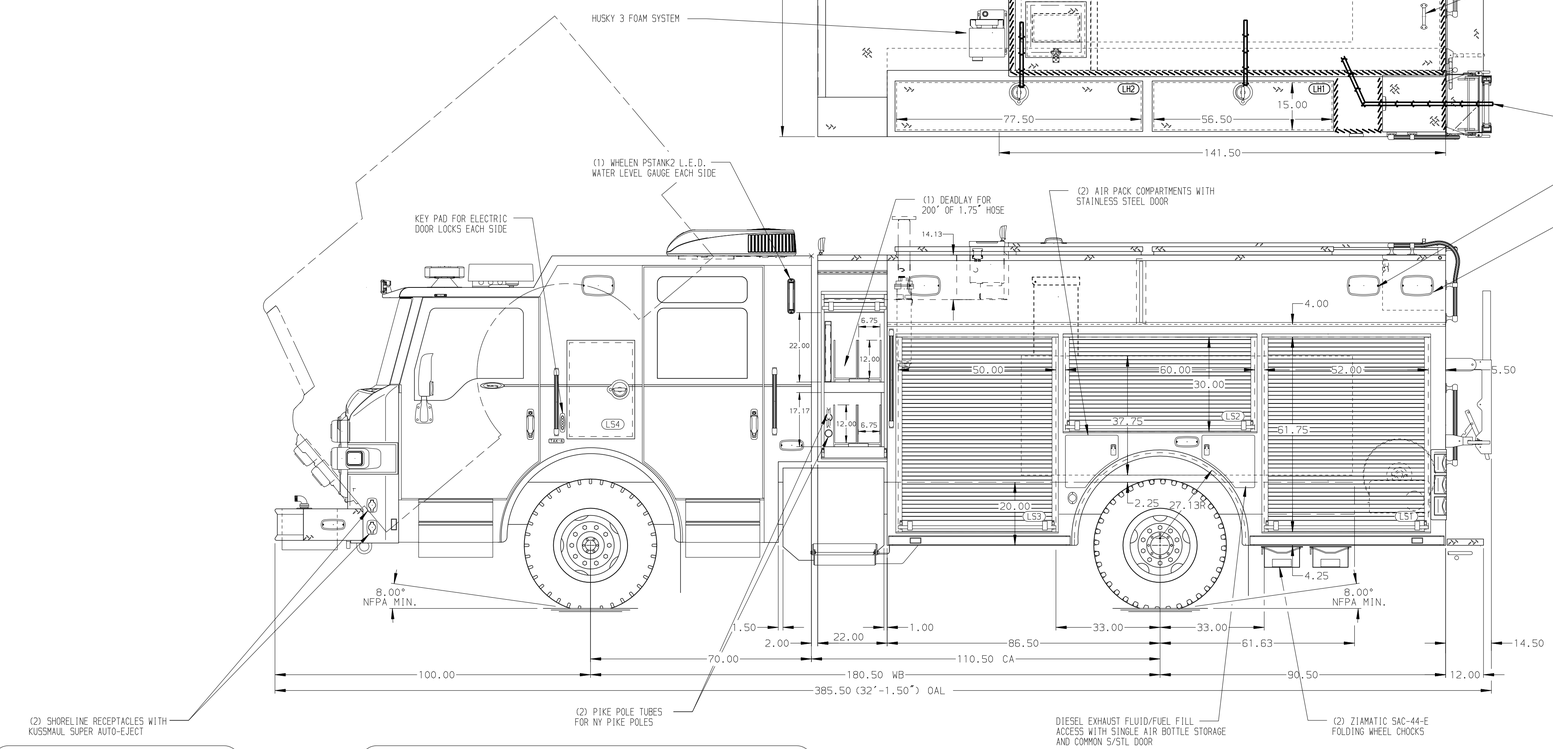

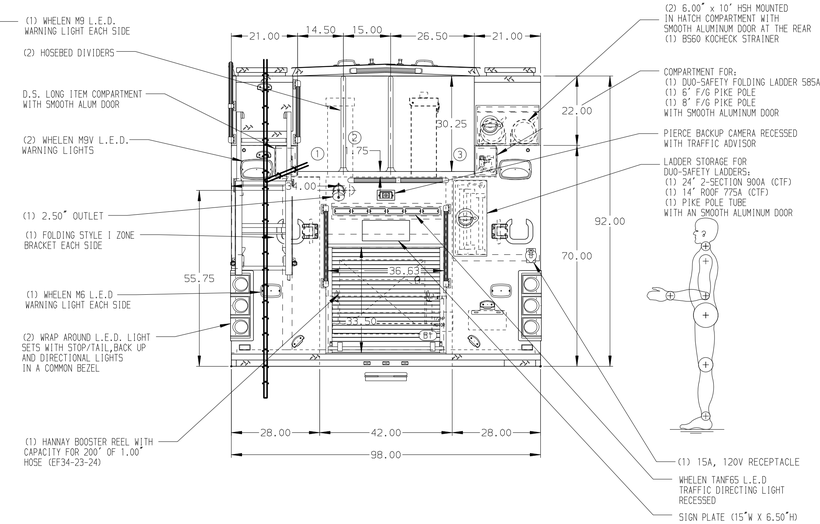

ALUMINUM BODY

FRONTAL IMPACT PROTECTION

NOTE

DIMENSIONS SHOWN ARE APPROXIMATE AND ARE SUBJECT TO MINOR DEVIATIONS AS MAY OCCUR OR BE NECESSARY IN CONSTRUCTION.
MINOR DETAILS NOT SHOWN.

1. ONE FULL WIDTH/DEPTH ADJUSTABLE SHELF IN COMPARTMENT LS2 & RS2 TWO IN RS1 FOUR IN RS3
2. ONE TOOLBOARD ADDED TO SLIDE-OUT TRAY IN COMPARTMENT LS3
3. ONE FLOOR MOUNTED SLIDE-OUT TRAY WITH 2" SIDES IN COMPARTMENT RS3
4. ONE VERTICAL DIVIDER IN COMPARTMENT RS3
5. CTECH TWO DRAWER ASSEMBLY IN COMPARTMENT LS3
6. PLUMBING DIAGRAM REQUIRED
7. AIR INLET/OUTLET W/DISCONNECT FITTING LOCATED RS & LS PUMP PANEL
8. ONE HORIZONTAL PARTITION LOCATED IN COMPARTMENT LS3
9. LITTLE GIANT LADDER LOCATED IN COMPARTMENT LS1
10. ONE VERTICAL PARTITION LOCATED IN COMPARTMENT LS1
11. ONE VERTICAL DIVIDER LOCATED IN COMPARTMENT RS3

REV	DATE	BY	CH
V	24SEP20	MMF	CHR
V	09SEP20	MMF	CHR
V	07AUG20	MMF	GKH
V	14FEB20	MMF	WKL

CHASSIS DATA
MAKE: PIERCE
MODEL: VELOCITY

Pierce MANUFACTURING INC.

TITLE: 1500-D-555P, 525 GAL WATER W/30 GAL FOAM, 177" BODY (3)XLAYS, LADDERS BTWN TANK & S/SHT, DELUGE, HUSKY 3

FOR: CLOVIS FIRE DEPARTMENT
CLOVIS, CALIFORNIA

DWG NO.: 34758AD

JOB NO.	34758 01-02
SCALE	1:24
DATE	
DRAWN BY	MMF 12FEB20
CHECKED BY	WKL 13FEB20
SHEET SIZE	D
SHEET NO.	1 OF 1

View File Created 24-SEP-2020 12:02:33